FORMWORK PROFILES #2

Global Solutions For Aluminium Extrusions

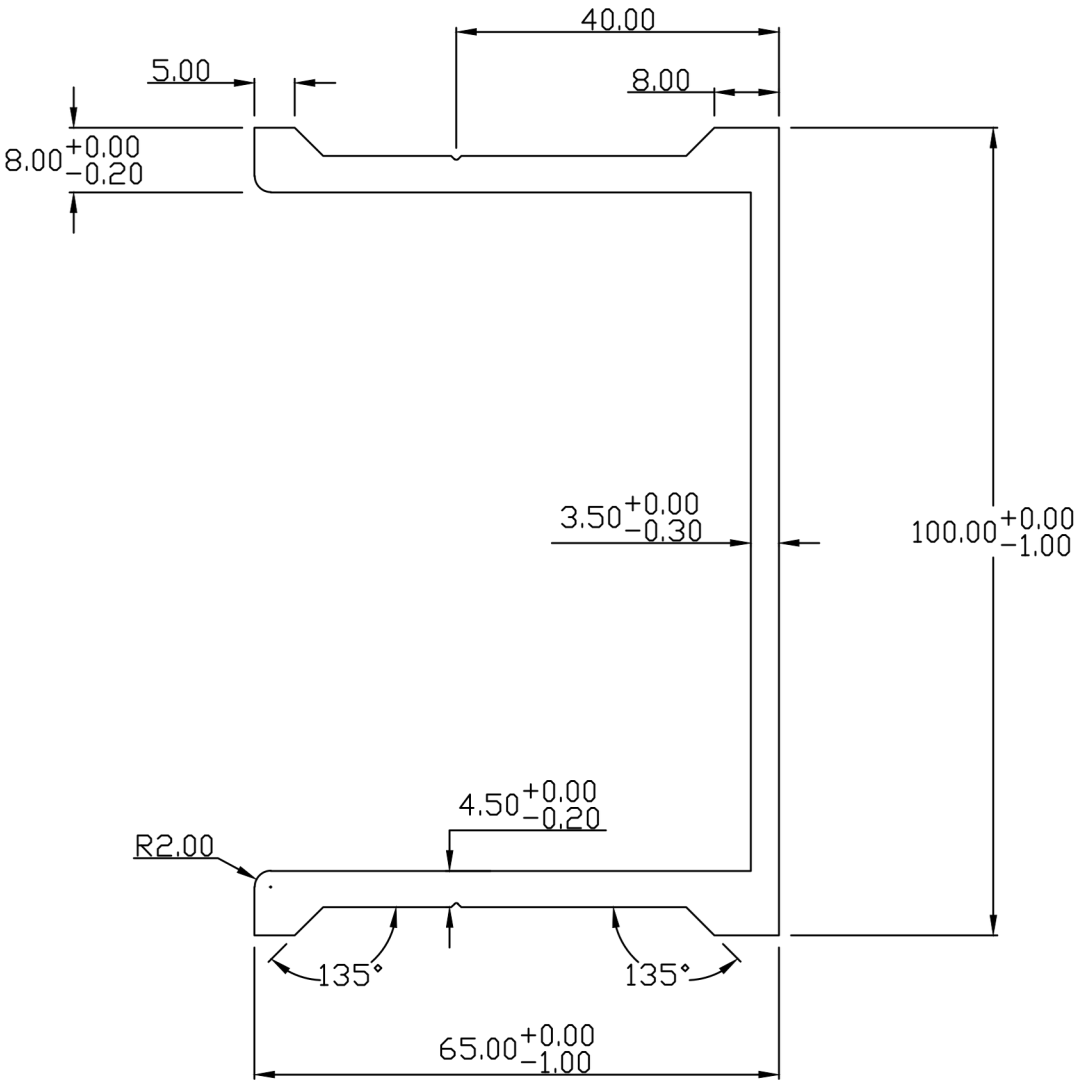

UNSPECIFIED TOLERANCES WILL BE IN ACCORDANCE WITH DIN ISO 2768-1 class C = Coarse

Dimension	0.5 - 33 - 6	6 - 30	30-120	120-400	400-1000
Longitudional	±0.2 ±0.4	±0.5	±0.8	±1.2	±2.0

Degree & Minutes	0.5 - 33 - 6	6 - 30	30-120
	±1.0 at 10	±2.0 ±1°	±0.8

Diameter	10-50	50-120	120-400	over 400
	±0.3	±0.8	±1.2	

NOTE:- UNSPECIFIED RADIOUS ARE 0.3 mm.
NOTE:- ALL DIMENSIONS ARE IN mm.

AREA:- 992.0424 Sqmm^	ALLOY/TEMPER:- 6061 T6	
EX PERIMETER:- 457.8590 MM	FLATNESS:-±0.8mm^	
WEIGHT:- 2.6785 Kg/Mtr.	TOLERANCES:	
DESCRIPTION:- CHANNEL 100	ANGULARITY:-±2°	CHECKED BY:-
PARTY DRG NO:-	straightness:-1.70meter	APPROVED BY:-
SECTION NO:- NP-70	TWIST:-1.70mm/meter	SCALE:- 1:1

Global Solutions For Aluminium Extrusions

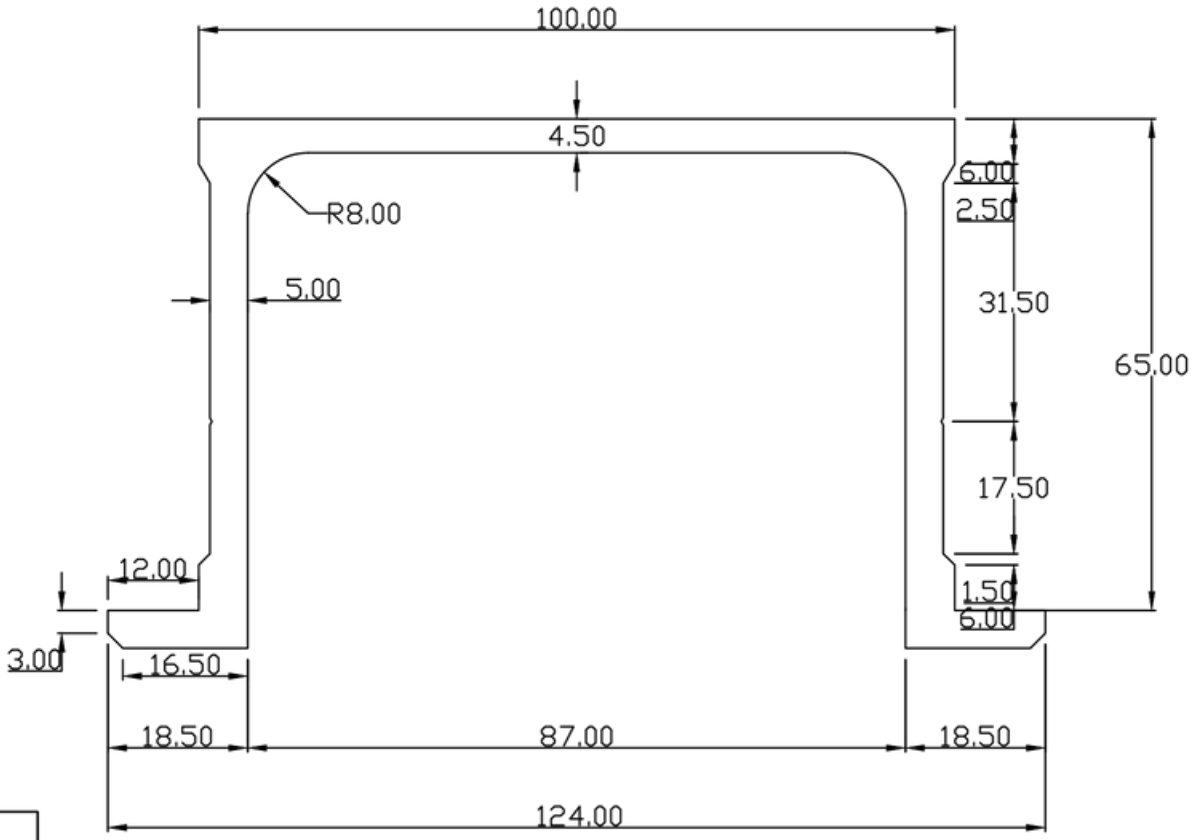

WITH DIN ISO 2768-1 class C = Coarse							
Dimension Longitudional	0.5 - 33 - 6 ±0.2	6 - 30 ±0.3	30-120 ±0.5	120-400 ±0.8			
Degree	0.5 - 33 - 6 ±0.4	6 - 30 ±0.5	30-120 ±0.8	120-400 ±1.2			
Radius Chamfer		6 - 30 ±2.0	30-120 ±0.8	±0°15°			
	10-50	50-120	120-400	over 400			
	±1.0 at 10						

NOTE:- ALL DIMENSIONS ARE IN mm.

AREA:- 1291.7190 Sqmm^	ALLOY/TEMPER:- 6063 T6	
EX PERIMETER:- 515.0993 MM	FLATNESS:-±0.9mm^	
WEIGHT:- 3.4876 Kg/m	TOLERANCES:	PARTY NAME:-
DESCRIPTION:-	ANGULARITY:-±1.4°	(M) No.:-
PARTY DRG. No.:- DBX-T	straightness:-1.50mm/meter	APPROVED BY:-
SECTION NO:- NP-187	TWIST:-2.50mm/meter	SCALE:- 1:1

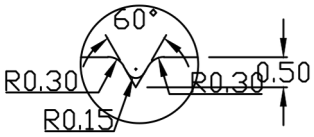

DETAIL:- A
SCALE:- 5:1

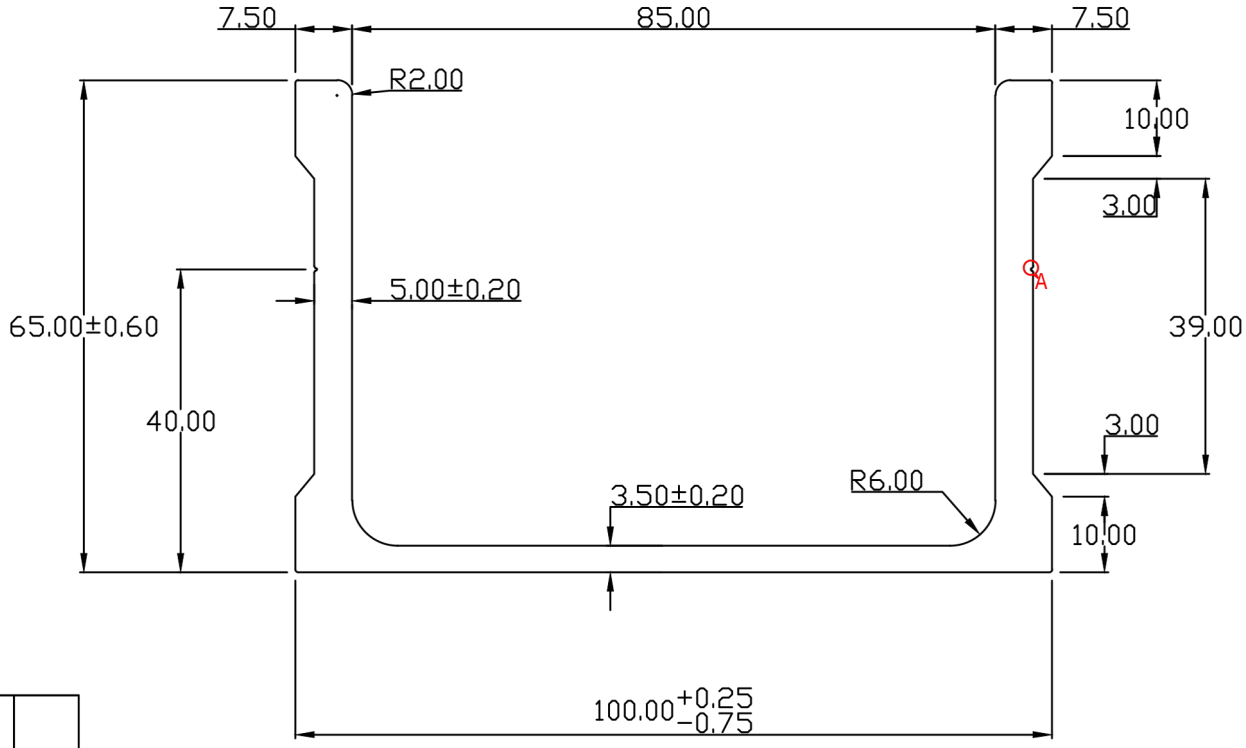

WITH DIN ISO 2768-1 class C = Coarse						
Dimension	0.5 - 33 - 6	6 - 30	30-120	120-400		
Longitudional	±0.2 ±0.4	±0.3	±0.5	±0.8	±1.2	
Degree	0.5 - 33 - 6		6 - 30	30-120	±0°15°	
Radius & Chamfer	±1.0 at 10	10-50	50-120	120-400	over 400	

NOTE:- ALL DIMENSIONS ARE IN mm.

AREA:- 1075.3200 Sqmm^	ALLOY/TEMPER:- 6061 T6	
EX PERIMETER:- 499.6813 MM	FLATNESS:-±0.9mm^	
WEIGHT:- 2.905 Kg/m	TOLERANCES:	
DESCRIPTION:-100 CHANNEL PROFILE	ANGULARITY:-±1.0°	(M) No.:-
PARTY DRG. No.:-	straightness:-±1.0mm/meter	APPROVED BY:-
SECTION NO:- NP-162	TWIST:-±1.0mm/meter	SCALE:- 1:1

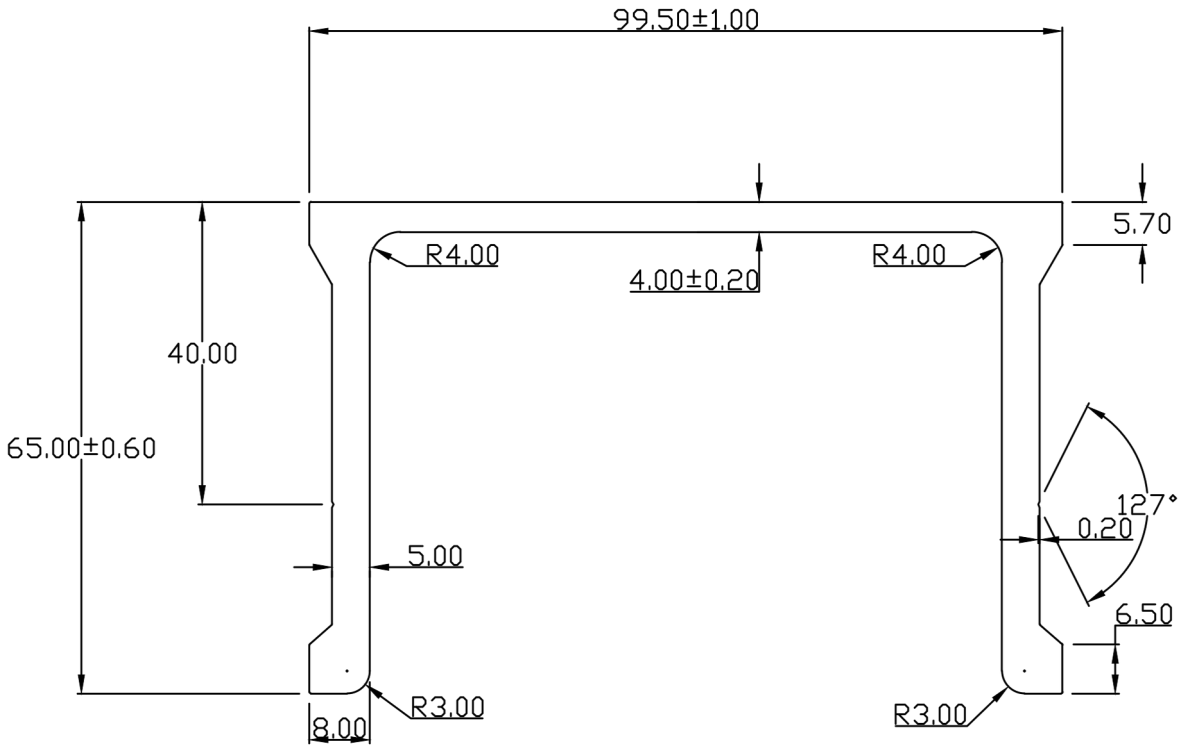

WITH DIN ISO 2768-1 class C = Coarse						
Dimension Longitudional	0.5 - 33 - 6 ±0.2	±0.3	6 - 30 ±0.5	30-120 ±0.8	120-400 ±1.2	
Degree	0.5 - 33 - 6 ±0.4		6 - 30 ±2.0	30-120 ±0.8	±0°15°	
Radius & Chamfer	±1.0 at 10	10-50	50-120120-400over 400			

NOTE:- ALL DIMENSIONS ARE IN mm.

AREA:- 1083.4217 Sqmm^	ALLOY/TEMPER:- 6063 T6	
EX PERIMETER:- 449.1234 MM	FLATNESS:-±0.9mm^	
WEIGHT:- 2.9252 Kg/m	TOLERANCES:	
DESCRIPTION:-	ANGULARITY:-±1.4°	
	straightness:-1.50mm/meter	APPROVED BY:-
SECTION NO:- NP-155	TWIST:-2.50mm/meter	SCALE:- 1:1

Global Solutions For Aluminium Extrusions

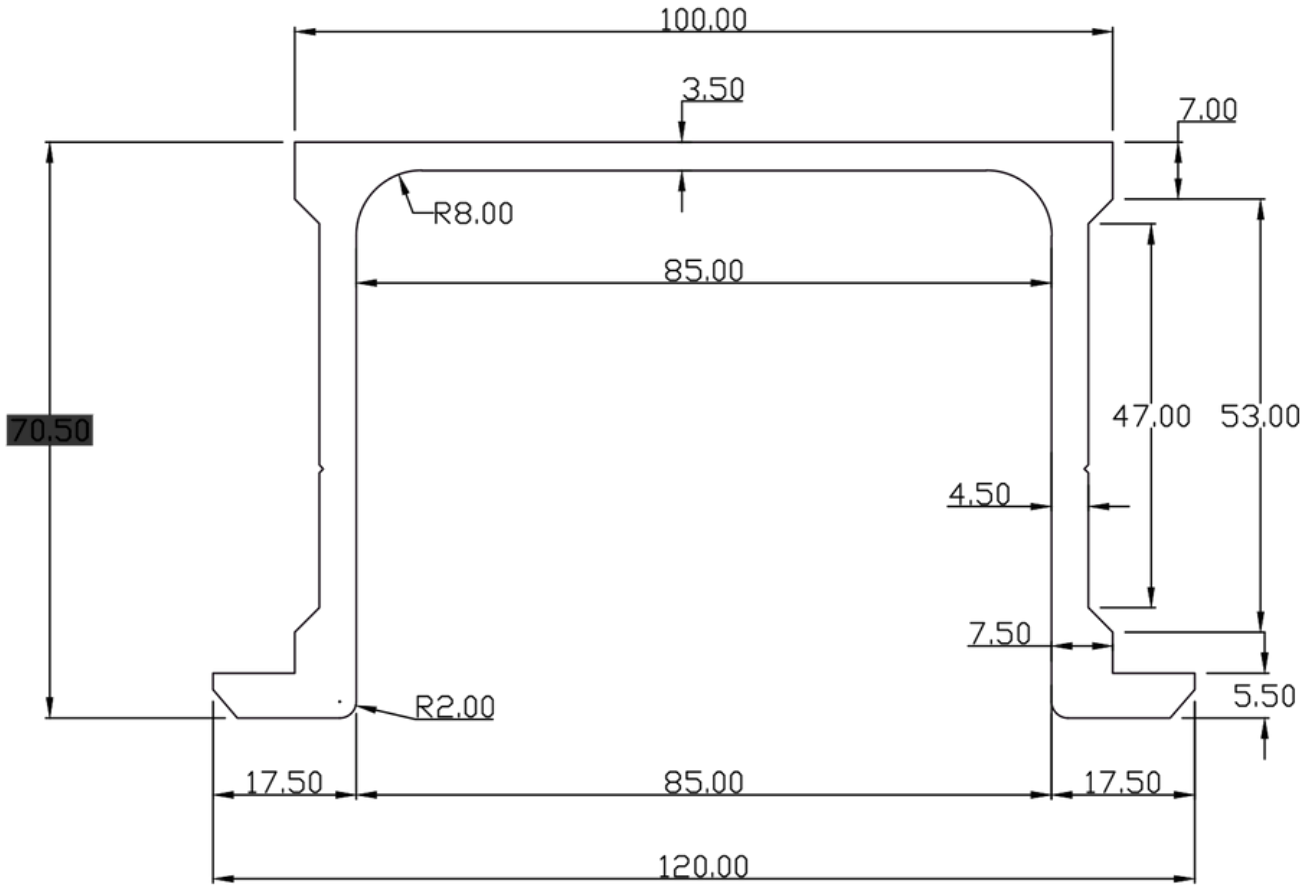

UNSPECIFIED TOLERANCES WILL BE IN ACCORDANCE WITH DIN ISO 2768-1 class C = Coarse

Dimension	0.5 - 33 - 6			6 - 30 ±1°	30-120	120-400	400-1000
Longitudional	±0.2 ±0.4		±0.3	±0.5	±0.8	±1.2	±2.0
Minor radius & chamfer	0.5 - 33 - 6			6 - 30 ±2.0 ±1°	30-120 ±0.8		
Rectangularity		±1.0 at 10	10-50	50-120	120-400	over 400	

±0°30°

±0°15°

NOTE:- ALL DIMENSIONS ARE IN mm.

AREA:- 1179.7522 Sqmm^	ALLOY/TEMPER:- 6061 T6	
EX PERIMETER:- 508.4345 MM	FLATNESS:-±0.7mm^	
WEIGHT:- 3.185 Kg/Mtr.	TOLERANCES:	
DESCRIPTION:- AS PER DRAWING	ANGULARITY:-±1°	CHECKED BY:-
PARTY DRG NO:-	straightness:-1.50meter	APPROVED BY:-
SECTION NO:- NP-112	TWIST:-1.50mm/meter	SCALE:- 1:1

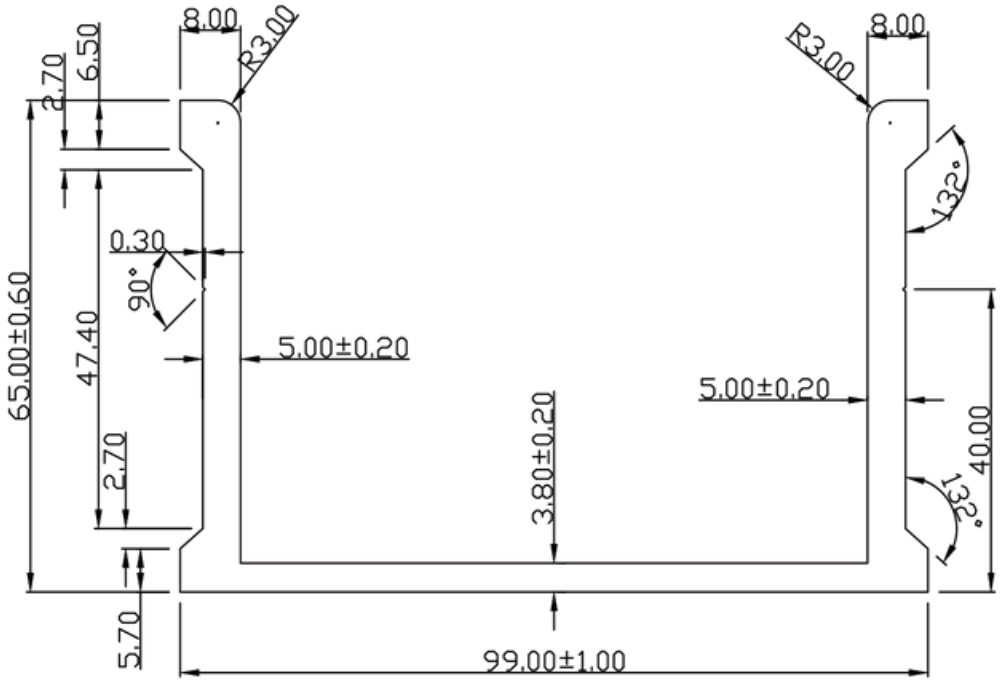

Dimension Longitudinal	0.5 - 33 - 6 ±0.2 ±0.4	±0.3	6 - 30 ±0.5	30-120 ±0.8	120-400 ±1.2
Degree & Chamfer	0.5 - 33 - 6		6 - 30 ±2.0	30-120 ±0.8	±0°15°
Radius	±1.0 at 10	10-50	50-120120-400over 400		

WITH DIN ISO 2768-1 class C = Coarse

NOTE:- ALL DIMENSIONS ARE IN mm.

AREA:- 1050.6299 Sqmm^	ALLOY/TEMPER:- 6061 T6	
EX PERIMETER:- 453.6692 MM	FLATNESS:-±1.0mm^	DATE:-
WEIGHT:- 2.8367 Kg/Mtr.	TOLERANCES:	
DESCRIPTION:-	ANGULARITY:-±1.0°	(M) No.:-
PARTY DRG NO:-	straightness:-1.00mm/meter	APPROVED BY:-
SECTION NO:- NP-347	TWIST:-1.00mm/meter	SCALE:- 1:1

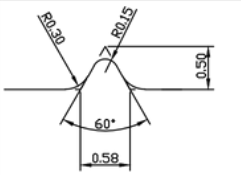

DETAIL:- A
V = V grove 0.50 x 60°

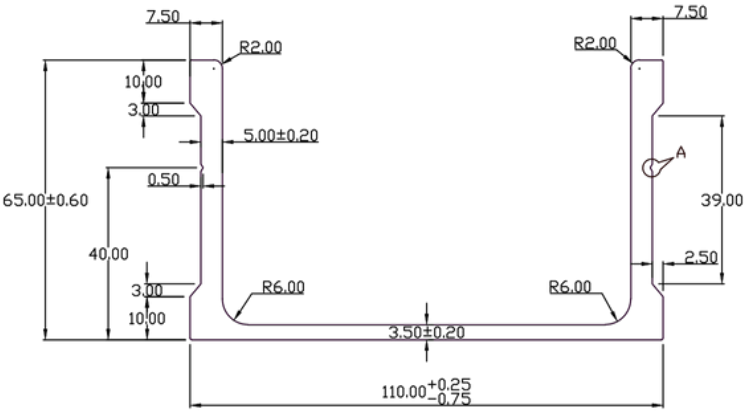

UNSPECIFIED TOLERANCES WILL BE IN ACCORDANCE WITH DIN 1685 PART 1 & 2 CLASS C

Dimension	6 - 30	30-120	120-400	400-1000
Longitudinal	±0.3	±0.5	±0.8	±1.2	±2.0
Angularity	0.5 - 33 - 6 ±0.4	6 - 30 ±2.0 ±1°	30-120 ±0.8	
Straightness	0.5 - 33 - 6 ±0.2	0.5 - 33 - 6		
Twist	±1.0 at 10			
Radius	10-50	50-120	120-400	over 400
Radius center	±30°	±15°		

NOTE:- UNSPECIFIED RADIUS:- 0.30 mm.
NOTE:- ALL DIMENSIONS ARE IN mm.

AREA:- 1110.2311 Sqmm^	ALLOY/TEMPER:- 6061 T6	
EX PERIMETER:- 469.6024 MM	FLATNESS:-±0.7mm^	
WEIGHT:- 2.9976 Kg/Mtr.	TOLERANCES:	
DESCRIPTION:- AS PER DRAWING	ANGULARITY:-±1°	(M) No.:-
PARTY DRG NO:- 1012	straightness:-1.00meter	APPROVED BY:-
SECTION NO:- NP-303	TWIST:-1.00mm/meter	SCALE:- 1:1

Global Solutions For Aluminium Extrusions

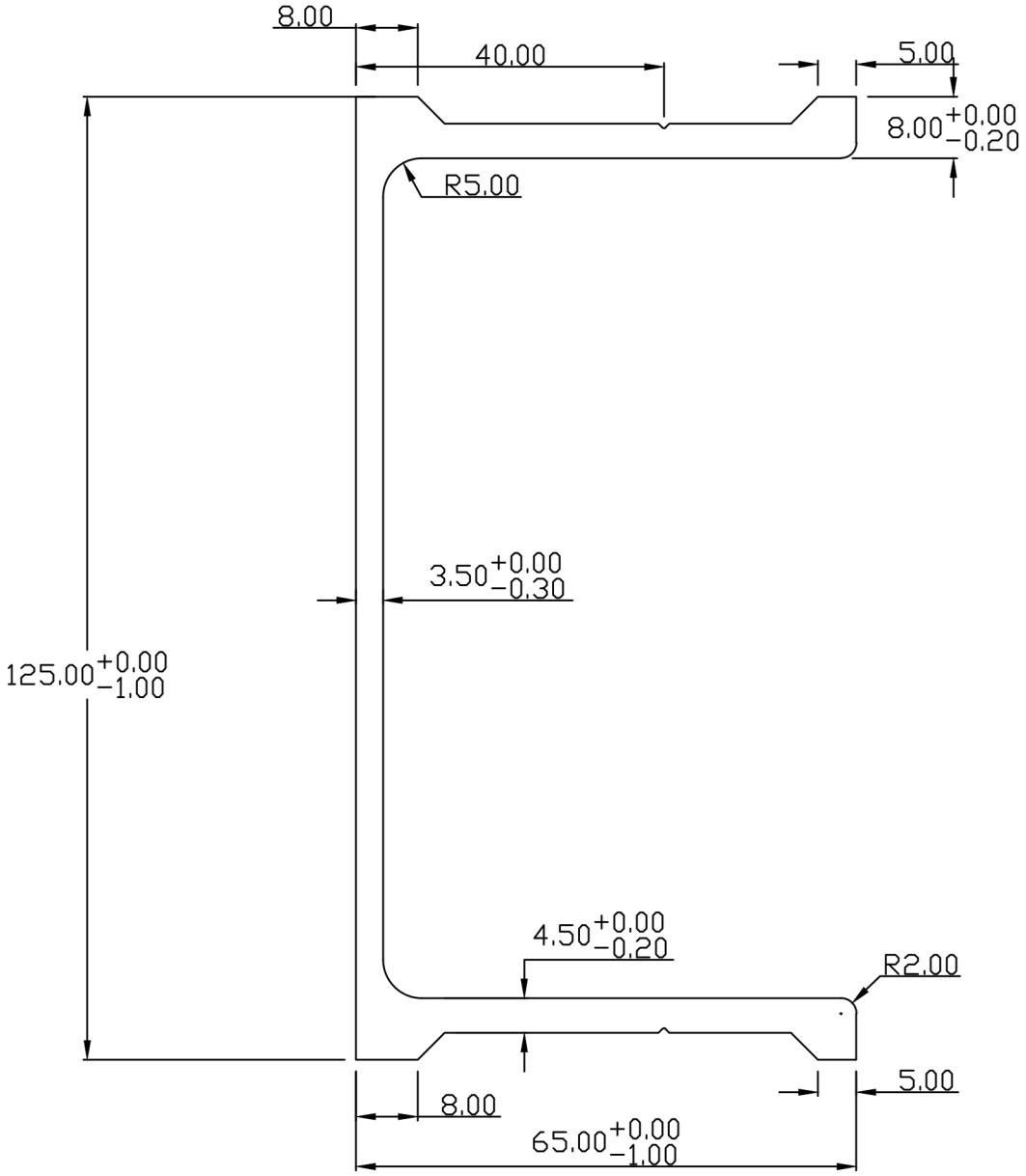

NOTE:- UNSPECIFIED RADIOUS ARE 0.3 mm.
NOTE:- ALL DIMENSIONS ARE IN mm.

UNSPECIFIED TOLERANCES WILL BE IN ACCORDANCE WITH DIN ISO 2768-1 class C= Coarse

Dimension	0.5 - 33 - 6	6 - 30	30-120	120-400	400-1000
Longitudional	±0.2	±0.3	±0.5	±0.8	±1.2	±2.0
Degrees & Minutes	±0.4		±1°	±0.8		
Radius & Chamfer	0.5 - 33 - 6	6 - 30	30-120	over 400		
	±1.0	±2.0	±0.8			
	at 10	10-50	50-120	120-400		

AREA:- 1090.0501 Sqmm^	ALLOY/TEMPER:- 6061 T6	
EX PERIMETER:- 503.7412 MM	FLATNESS:-±0.8mm^	
WEIGHT:- 2.943 Kg/Mtr.	TOLERANCES:	
DESCRIPTION:- CHANNEL 125	ANGULARITY:-±2°	CHECKED BY:-
PARTY DRG NO:-	straightness:-1.70meter	APPROVED BY:-
SECTION NO:- NP-58	TWIST:-1.70mm/meter	SCALE:- 1:1

Global Solutions For Aluminium Extrusions

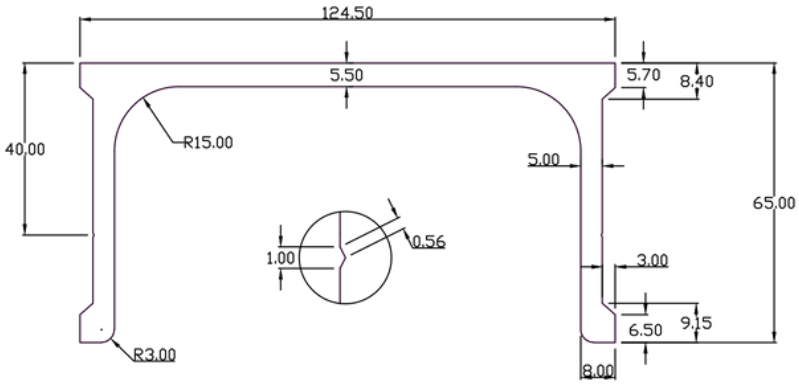

UNSPECIFIED TOLERANCES WILL BE IN ACCORDANCE WITH DIN ISO 2768-1 Class Coarse

Dimension	0.5 - 33	6 - 30	30-120	120-400	400-1000
Longitudional	±0.2	±0.5	±0.8	±1.2	±2.0
	0.5 - 33 - 6	6 - 30	30-120		
	±0.4	±2.0	±0.8		
	±0.3	±1°	±0.8		
Radius	±1.0				
Mm Radius Diameter	at 10	10-50	50-120	120-400	over 400

±30°
±15°

NOTE:- UNSPECIFIED RADIUS:- 0.30 mm.
NOTE:- ALL DIMENSIONS ARE IN mm.

AREA:- 1428.4580 Sqmm^	ALLOY/TEMPER:- 6061 T6	
EX PERIMETER:- 493.8625 MM	FLATNESS:-±0.7mm^	
WEIGHT:- 3.8568 Kg/Mtr.	TOLERANCES:	
DESCRIPTION:- AS PER DRAWING	ANGULARITY:-±1°	(M) No.:-
	straightness:-1.50meter	APPROVED BY:-
SECTION NO:- NP-167	TWIST:-1.50mm/meter	SCALE:- 1:1

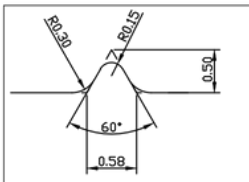

DETAIL:- A
V = V grove 0.50 x 60°

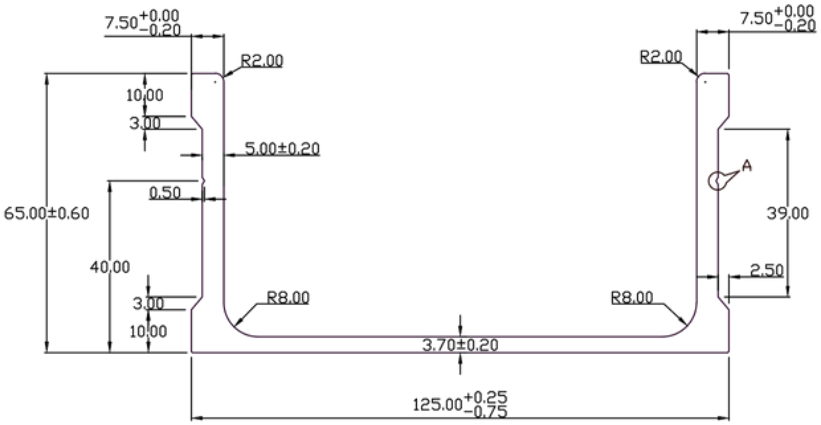

UNSPECIFIED TOLERANCES WILL BE IN ACCORDANCE WITH DIN 16901 Fine Class

Dimension	0.5 - 33 - 6	6 - 30 ±1°	30-120 ±0.8	120-400 ±1.2	400-1000 ±2.0
Longitudinal	±0.3	±0.5	±0.8		
Permissible Deviation from Nominal Dimension	0.5 - 33 - 6 ±0.2 ±0.4	6 - 30 ±2.0 ±1°	30-120 ±0.8		
	±1.0 at 10	10-50	50-120	120-400	over 400

±2°30'
±2°15'

NOTE:- UNSPECIFIED RADIUS:- 0.30 mm.
NOTE:- ALL DIMENSIONS ARE IN mm.

AREA:- 1196.7488 Sqmm^	ALLOY/TEMPER:- 6061 T6	
EX PERIMETER:- 497.4856 MM	FLATNESS:-±0.7mm^	
WEIGHT:- 3.2312 Kg/Mtr.	TOLERANCES:	
DESCRIPTION:- AS PER DRAWING	ANGULARITY:-±1°	(M) No.:-
PARTY DRG NO:- 1015	straightness:-1.00meter	APPROVED BY:-
SECTION NO:- NP-301	TWIST:-1.00mm/meter	SCALE:- 1:1

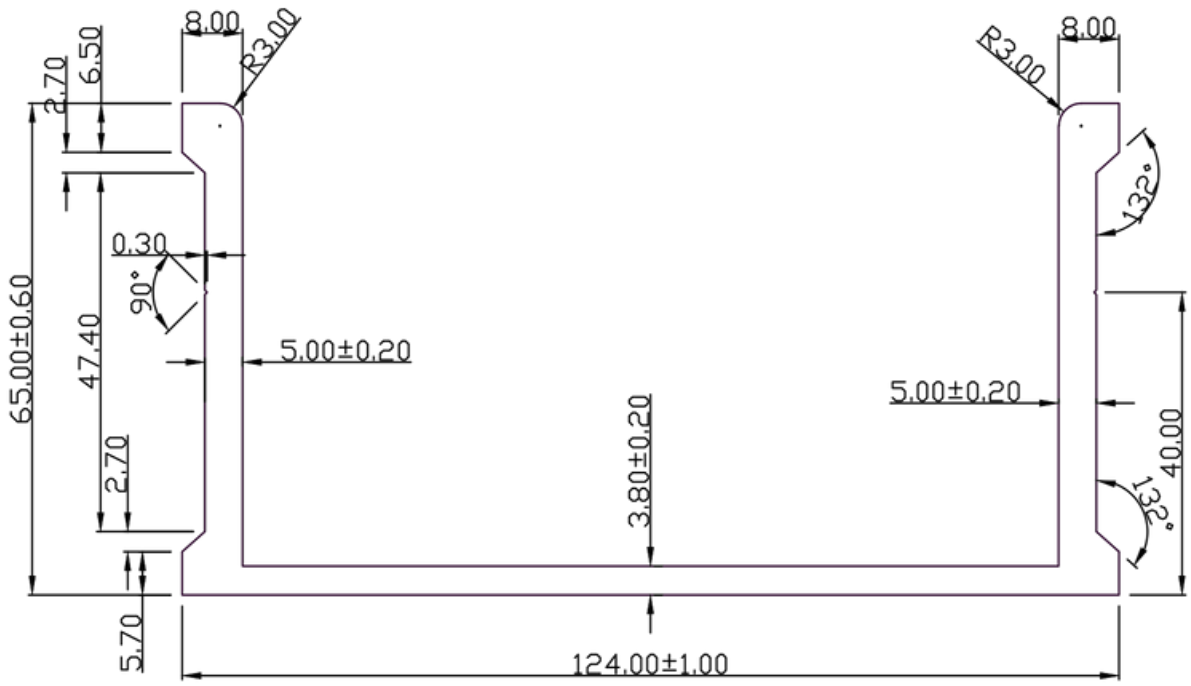

WITH DIN ISO 2768-1 class C = Coarse							
Dimension Longitudional	0.5 - 33 - 6 ±0.2 ±0.4	±0.3	6 - 30 ±0.5	30-120 ±0.8	120-400 ±1.2		
Degree Radius & Chamfer	0.5 - 33 - 6		6 - 30 ±2.0	30-120 ±0.8	±0°15°		
	±1.0 at 10	10-50	50-120120-400over 400				

NOTE:- ALL DIMENSIONS ARE IN mm.

AREA:- 1145.5916 Sqmm^	ALLOY/TEMPER:- 6061 T6	
EX PERIMETER:- 503.6692 MM	FLATNESS:-±1.0mm^	DATE:-
WEIGHT:- 3.0930 Kg/Mtr.	TOLERANCES:	
DESCRIPTION:-	ANGULARITY:-±1.0°	(M) No.:-
PARTY DRG NO:-	straightness:-1.00mm/meter	APPROVED BY:-
SECTION NO:- NP-348	TWIST:-1.00mm/meter	SCALE:- 1:1

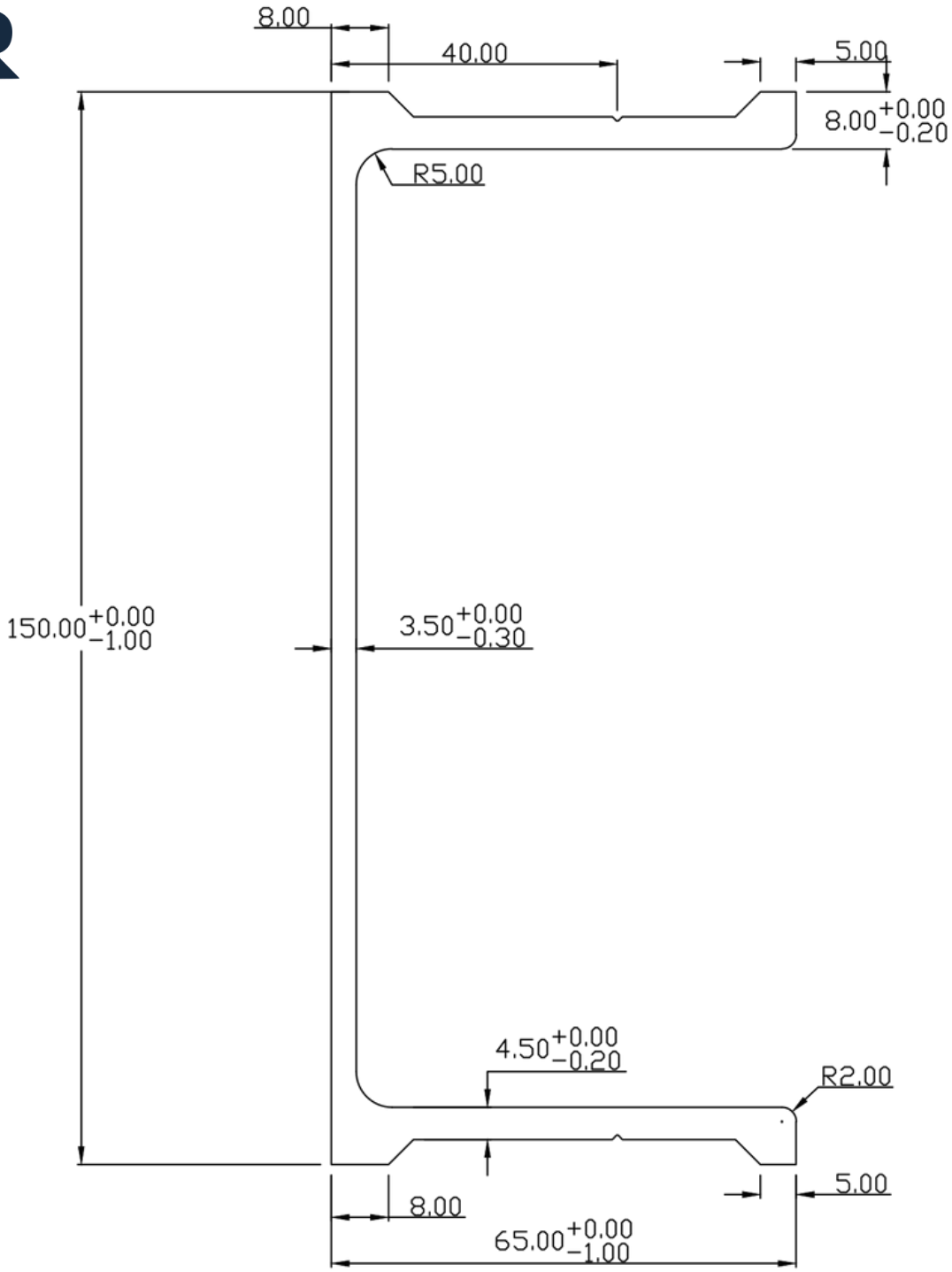

NOTE:- UNSPECIFIED RADIOUS ARE 0.3 mm.
NOTE:- ALL DIMENSIONS ARE IN mm.

UNSPECIFIED TOLERANCES WILL BE IN ACCORDANCE WITH DIN ISO 2768-1 class C = Coarse

Dimension	0.5 - 33 - 6	6 - 30	30-120	120-400	400-1000
Longitudional	±0.2 ±0.4	±0.5	±0.8	±1.2	±2.0
Degree	0.5 - 33 - 6	6 - 30 ±1°	30-120 ±1°		
Minutes		±2.0	±0.8		
Radius & Chamfer	±1.0 at 10	10-50	50-120	120-400	over 400
		±30°	±15°		

AREA:- 1177.5501 Sqmm^	ALLOY/TEMPER:- 6061 T6	
EX PERIMETER:- 553.7412 MM	FLATNESS:-±0.8mm^	
WEIGHT:- 3.179 Kg/Mtr.	TOLERANCES:	
DESCRIPTION:- CHANNEL 150	ANGULARITY:-±2°	CHECKED BY:-
PARTY DRG NO:-	straightness:-1.70meter	APPROVED BY:-
SECTION NO:- NP-56	TWIST:-1.70mm/meter	SCALE:- 1:1

Global Solutions For Aluminium Extrusions

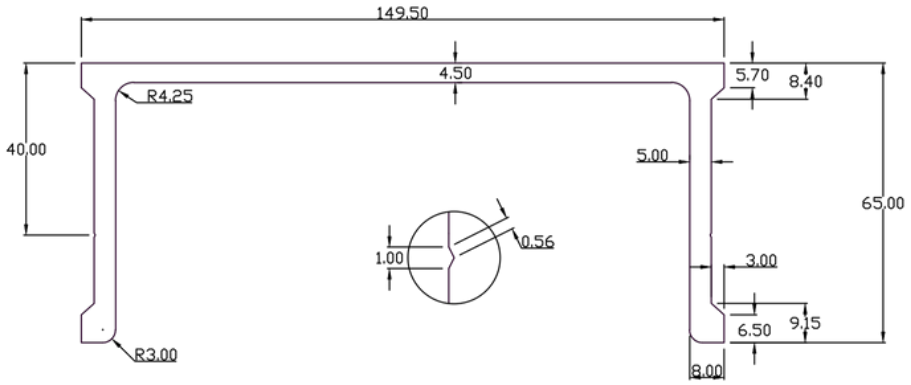

NOTE:- UNSPECIFIED RADIUS:- 0.30 mm.
NOTE:- ALL DIMENSIONS ARE IN mm.

UNSPECIFIED TOLERANCES WILL BE IN ACCORDANCE WITH IS 2769 CODE

Dimension	6 - 30	30-120	120-400	400-1000
Longitudional	±0.3	±0.5	±0.8	±1.2	±2.0
Perpendicularity	0.5 - 33 - 6 ±0.2	6 - 30 ±2.0	30-120 ±0.8	
Mechanical Properties	0.5 - 33 - 6 ±0.4	±2°	±1°	
Straightness	±1.0 at 10	10-50	50-120	120-400	over 400
Angularity	±30°	±15°			

AREA:- 1343.6397 Sqmm^	ALLOY/TEMPER:- 6061 T6	
EX PERIMETER:- 555.0904 MM	FLATNESS:-±0.7mm^	
WEIGHT:- 3.6278 Kg/Mtr.	TOLERANCES:	
DESCRIPTION:- AS PER DRAWING	ANGULARITY:-±1°	(M) No.:-
	straightness:-1.50meter	APPROVED BY:-
SECTION NO:- NP-168	TWIST:-1.50mm/meter	SCALE:- 1:1

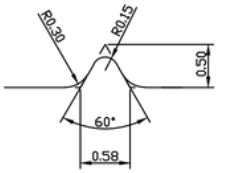

DETAIL:- A
V = V grove 0.50 x 60°

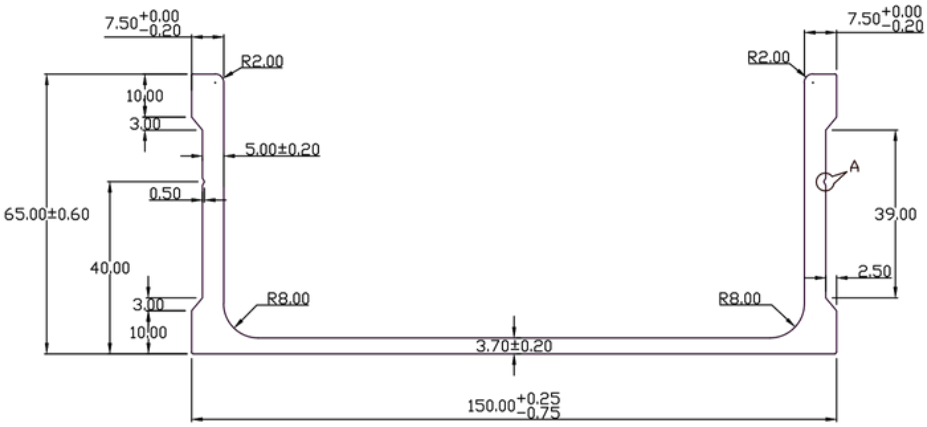

UNSPECIFIED TOLERANCE

Dimension	6 - 30	30-120	120-400	400-1000
Longitudional	±0.3	±0.5	±0.8	±1.2	±2.0
	0.5 - 33 - 6 ±0.2	6 - 30 ±2.0	30-120 ±0.8	
	0.5 - 33 - 6 ±0.4	±1°	±1°	
	±1.0 at 10	10-50	50-120	120-400	over 400
		±30°	±15°	

NOTE:- UNSPECIFIED RADIUS:- 0.30 mm.
NOTE:- ALL DIMENSIONS ARE IN mm.

AREA:- 1289.2488 Sqmm^	ALLOY/TEMPER:- 6061 T6	
EX PERIMETER:- 547.4856 MM	FLATNESS:-±0.7mm^	
WEIGHT:- 3.4809 Kg/Mtr.	TOLERANCES:	
DESCRIPTION:- AS PER DRAWING	ANGULARITY:-±1°	(M) No.:-
PARTY DRG NO:- 1020	straightness:-1.00meter	APPROVED BY:-
SECTION NO:- NP-302	TWIST:-1.00mm/meter	SCALE:- 1:1

Global Solutions For Aluminium Extrusions

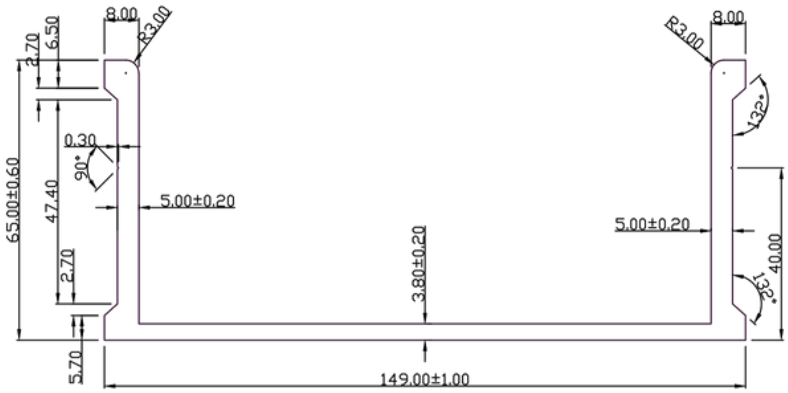

UNSPECIFIED TOLERANCES WILL BE IN ACCORDANCE WITH DIN ISO 2768-1 CLASS C-G CONDITION

Dimension Longitudional	0.5 - 33 - 6 ±0.2	±0.3	6 - 30 ±0.5	30-90 ±0.8	90-120 ±0.8	120-400 ±1.2	400-1000 ±2.0
Perpendicularity	0.5 - 33 - 6 ±0.4	±1.0	6 - 30 ±2.0	30-120 ±0.8			
Mounting surface	at 10	10-50	50-120	120-400	over 400		

±1°
±0.15°

NOTE:- UNSPECIFIED RADIUS:- 0.30 mm.
NOTE:- ALL DIMENSIONS ARE IN mm.

AREA:- 1240.5532 Sqmm^	ALLOY/TEMPER:- 6061 T6	
EX PERIMETER:- 553.6692 MM	FLATNESS:-±0.7mm^	
WEIGHT:- 3.3494 Kg/Mtr.	TOLERANCES:	
DESCRIPTION:- AS PER DRAWING	ANGULARITY:-±1°	(M) No.:-
PARTY DRG NO:-	straightness:-1.50meter	APPROVED BY:-
SECTION NO:- NP-349	TWIST:-1.50mm/meter	SCALE:- 1:1

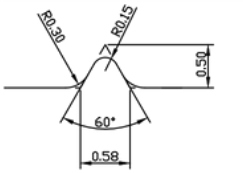

DETAIL:- A
V = V grove 0.50 x 60°

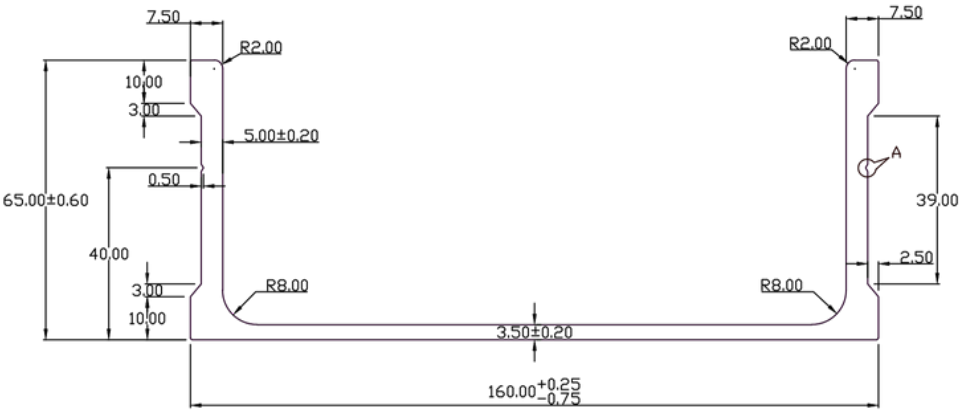

UNSPECIFIED TOLERANCES WILL BE IN ACCORDANCE WITH ISO 2768-1	6 - 30	30-120	120-400	400-1000
Dimension	±0.3	±0.5	±0.8	±1.2
Longitudinal	±0.4	±2.0	±0.8	±2.0

Material Grading Transfer	0.5 - 33 - 6	6 - 30	30-120	120-400	over 400
Angularity	±0.2	±1°	±1°		
Straightness	0.5 - 33 - 6				
Flatness	±1.0 at 10				

Twist	10-50	50-120	120-400	over 400
		±30°	±15°	

NOTE:- UNSPECIFIED RADIUS:- 0.30 mm.
NOTE:- ALL DIMENSIONS ARE IN mm.

AREA:- 1297.2488 Sqmm^	ALLOY/TEMPER:- 6061 T6	
EX PERIMETER:- 567.8856 MM	FLATNESS:-±0.7mm^	
WEIGHT:- 3.5025 Kg/Mtr.	TOLERANCES:	
DESCRIPTION:- AS PER DRAWING	ANGULARITY:-±1°	(M) No.:-
PARTY DRG NO:- 1022	straightness:-1.00meter	APPROVED BY:-
SECTION NO:- NP-304	TWIST:-1.00mm/meter	SCALE:- 1:1

Global Solutions For Aluminium Extrusions

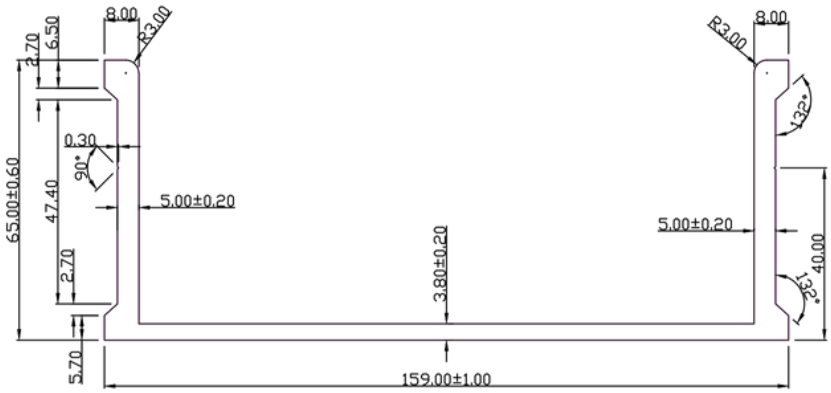

UNSPECIFIED TOLERANCES WILL BE IN ACCORDANCE WITH DIN ISO 2768-1 CLASS C-G CONDITION

Dimension Longitudional	0.5 - 33 - 6 ±0.2	±0.3	6 - 30 ±0.5	30-90 ±0.8	90-120 ±0.8	120-400 ±1.2	400-1000 ±2.0
Perpendicularity Mm/mm	0.5 - 33 - 6 ±0.4	±1.0	6 - 30 ±2.0	30-120 ±0.8			
Flatness	at 10	10-50	50-120	120-400	over 400		

±1°30'
±0°15'

NOTE:- UNSPECIFIED RADIUS:- 0.30 mm.
NOTE:- ALL DIMENSIONS ARE IN mm.

AREA:- 1278.5379 Sqmm^	ALLOY/TEMPER:- 6061 T6	
EX PERIMETER:- 573.6692 MM	FLATNESS:-±0.7mm^	
WEIGHT:- 3.4520 Kg/Mtr.	TOLERANCES:	
DESCRIPTION:- AS PER DRAWING	ANGULARITY:-±1°	(M) No.:-
PARTY DRG NO:-	straightness:-1.50meter	APPROVED BY:-
SECTION NO:- NP-350	TWIST:-1.50mm/meter	SCALE:- 1:1

Global Solutions For Aluminium Extrusions

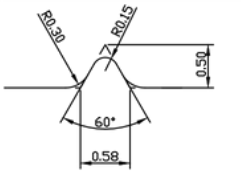

DETAIL:- A
V = V grove 0.50 x 60°

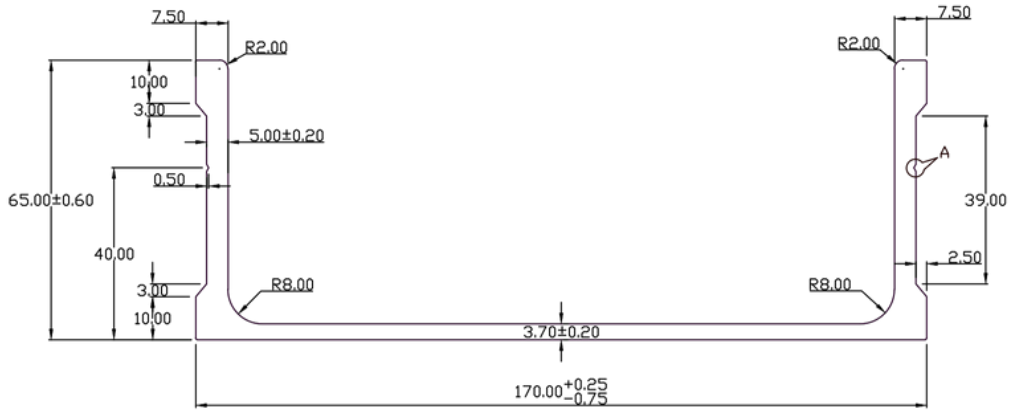

UNSPECIFIED TOLERANCES WILL BE IN ACCORDANCE WITH IS 2369										
Dimension	0.5 - 33 - 6 ±0.2 ±0.4	±0.3	6 - 30 ±0.5	0.5 - 33 - 6 ±2.0 ±1°	6 - 30 ±0.8	30-120 ±0.8	120-400 ±1.2	400-1000 ±2.0
Longitudional	±1.0 at 10	10-50	50-120	120-400	over 400			

Mechanical Properties as per Customer Requirement

NOTE:- UNSPECIFIED RADIUS:- 0.30 mm.
NOTE:- ALL DIMENSIONS ARE IN mm.

AREA:- 1363.2488 Sqmm^	ALLOY/TEMPER:- 6061 T6	
EX PERIMETER:- 587.4856 MM	FLATNESS:-±0.7mm^	
WEIGHT:- 3.6807 Kg/Mtr.	TOLERANCES:	
DESCRIPTION:- AS PER DRAWING	ANGULARITY:-±1°	(M) No.:-
PARTY DRG NO:- 1024	straightness:-1.00meter	APPROVED BY:-
SECTION NO:- NP-307	TWIST:-1.00mm/meter	SCALE:- 1:1

NOTE:- UN-SPECIFIED RADIOUS ARE 0.3 mm.
NOTE:- ALL DIMENSIONS ARE IN mm.

UNSPECIFIED TOLERANCES WILL BE IN ACCORDANCE WITH DIN ISO 2768-1 Class C = Coarse

Dimension Longitudional	0.5 - 33 - 6 ±0.2	±0.3	6 - 30 ±0.5	30-120 ±0.8	120-400 ±1.2	400-1000 ±2.0
Radius & Chamfer	0.5 - 33 - 6 ±0.4	±1.0	6 - 30 ±2.0	30-120 ±0.8		
Minutes	at 10	10-50	50-120	120-400	400-3000	

AREA:- 1265.0501 Sqmm^	ALLOY/TEMPER:- 6061 T6	
EX PERIMETER:- 603.7412 MM	FLATNESS:-±0.8mm^	
WEIGHT:- 3.415 Kg/Mtr.	TOLERANCES:	
DESCRIPTION:- CHANNEL 175	ANGULARITY:-±2°	CHECKED BY:-
PARTY DRG NO:-	straightness:-1.70meter	APPROVED BY:-
SECTION NO:- NP-57	TWIST:-1.70mm/meter	SCALE:- 1:1

Global Solutions For Aluminium Extrusions

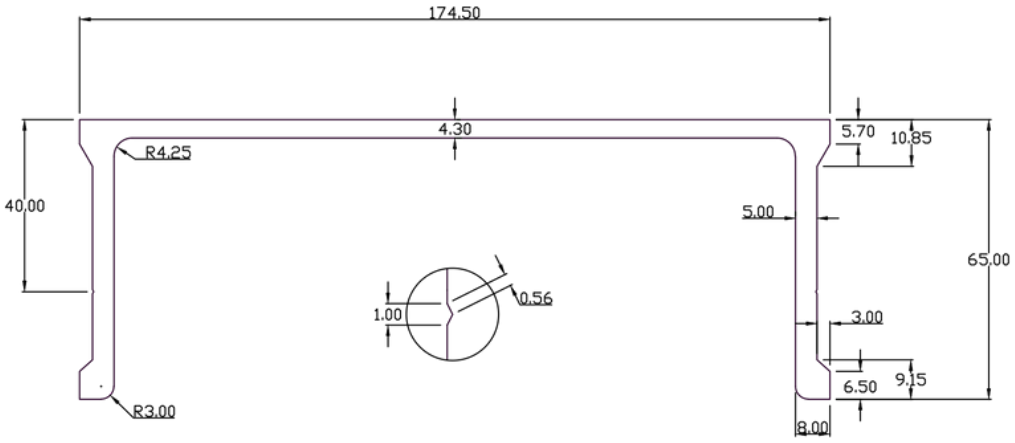

NOTE:- UNSPECIFIED RADIUS:- 0.30 mm.
NOTE:- ALL DIMENSIONS ARE IN mm.

UNSPECIFIED TOLERANCES WILL BE IN ACCORDANCE WITH DIN 16901 ISO 2768-1 Fine Class												
Dimension Longitudional	0.5 - 33 - 6 ±0.2	±0.3	6 - 30 ±0.5	30-90 ±0.8	90-120 ±0.8	120-400 ±1.2	400-1000 ±2.0					
Angularity	0.5 - 33 - 6 ±1°		6 - 30 ±2.0 ±1°	30-120 ±0.8								
Straightness per meter	±1.0 at 10	10-50	50-120	120-400	over 400							

AREA:- 1431.7897 Sqmm^	ALLOY/TEMPER:- 6061 T6	
EX PERIMETER:- 604.4384 MM	FLATNESS:-±0.7mm^	
WEIGHT:- 3.8658 Kg/Mtr.	TOLERANCES:	
DESCRIPTION:- AS PER DRAWING	ANGULARITY:-±1°	(M) No.:-
	straightness:-1.50meter	APPROVED BY:-
SECTION NO:- NP-169	TWIST:-1.50mm/meter	SCALE:- 1:1

Global Solutions For Aluminium Extrusions

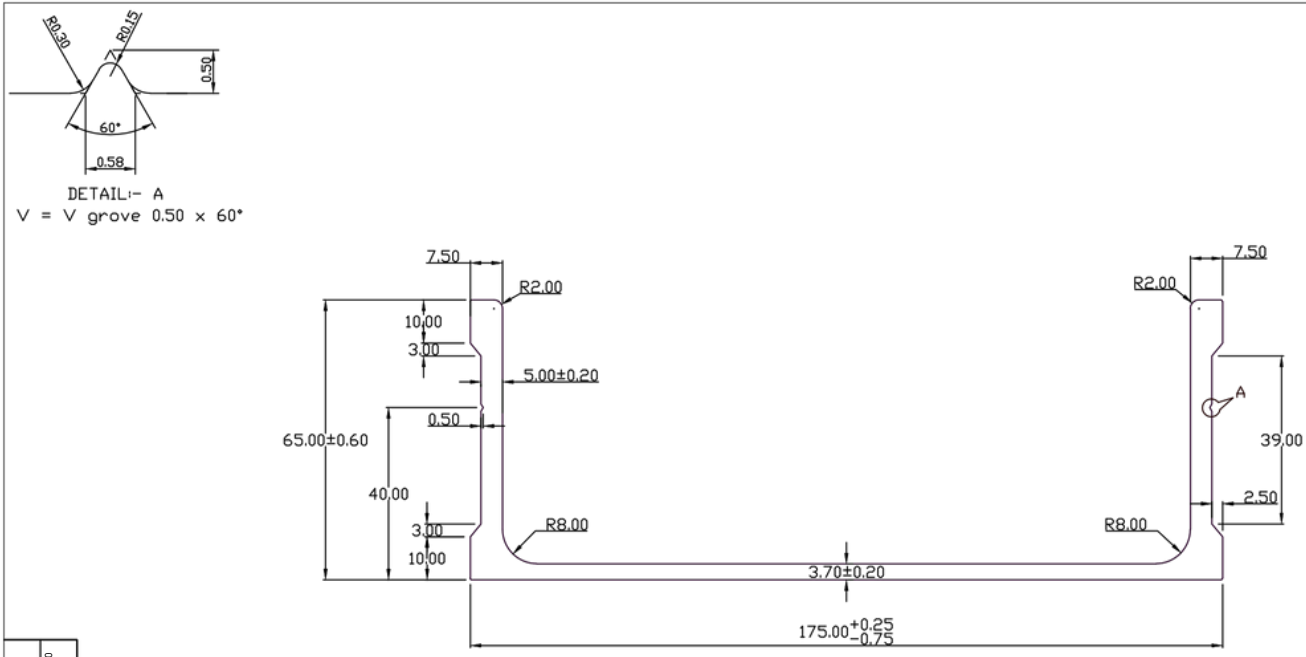

UNSPECIFIED TOLERANCES WILL BE IN ACCORDANCE WITH BIS IS 2769 & IS 1852 Cat. Code										
Dimension	0.5 - 33 - 6	6 - 30	30-120	120-400	400-1000
Longitudional	±0.2 ±0.4	±0.5	±0.8	±1.2	±2.0
Mechanical Properties as per	0.5 - 33 - 6	6 - 30 ±1°	30-120 ±0.8		
Alloy	±1.0 at 10	±2.0	±0.8	over 400	
	10-50	50-120	120-400		
	±0.3	±0.5	±0.8		

±30°
±15°

NOTE:- UNSPECIFIED RADIUS:- 0.30 mm.
NOTE:- ALL DIMENSIONS ARE IN mm.

AREA:- 1381.7488 Sqmm^	ALLOY/TEMPER:- 6061 T6	
EX PERIMETER:- 597.4856 MM	FLATNESS:-±0.7mm^	
WEIGHT:- 3.7307 Kg/Mtr.	TOLERANCES:	
DESCRIPTION:- AS PER DRAWING	ANGULARITY:-±1°	(M) No.:-
PARTY DRG NO:- 1025	straightness:-1.00meter	APPROVED BY:-
SECTION NO:- NP-305	TWIST:-1.00mm/meter	SCALE:- 1:1

Global Solutions For Aluminium Extrusions

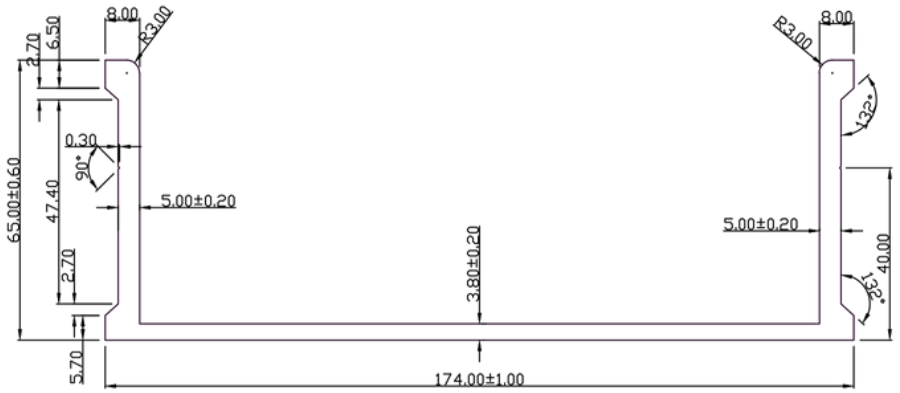

UNSPECIFIED TOLERANCES WILL BE IN ACCORDANCE WITH DIN ISO 2768-1 CLASS C-G CONLYE

Dimension								
Longitudional	0.5 - 33 - 6 ±0.2	±0.3	6 - 30 ±0.5	30-90-120 ±0.8	120-400 ±1.2	400-1000 ±2.0		
	0.5 - 33 - 6 ±0.4	±1.0	6 - 30 ±2.0	30-120 ±0.8				
Mm/degree angular	at 10	10-50	50-120	120-400	over 400			

±10°
±15°

NOTE:- UNSPECIFIED RADIUS:- 0.30 mm.
NOTE:- ALL DIMENSIONS ARE IN mm.

AREA:- 1335.5149 Sqmm^	ALLOY/TEMPER:- 6061 T6	
EX PERIMETER:- 603.6692 MM	FLATNESS:-±0.7mm^	
WEIGHT:- 3.6058 Kg/Mtr.	TOLERANCES:	
DESCRIPTION:- AS PER DRAWING	ANGULARITY:-±1°	(M) No.:-
PARTY DRG NO:-	straightness:-1.50meter	APPROVED BY:-
SECTION NO:- NP-351	TWIST:-1.50mm/meter	SCALE:- 1:1

Global Solutions For Aluminium Extrusions

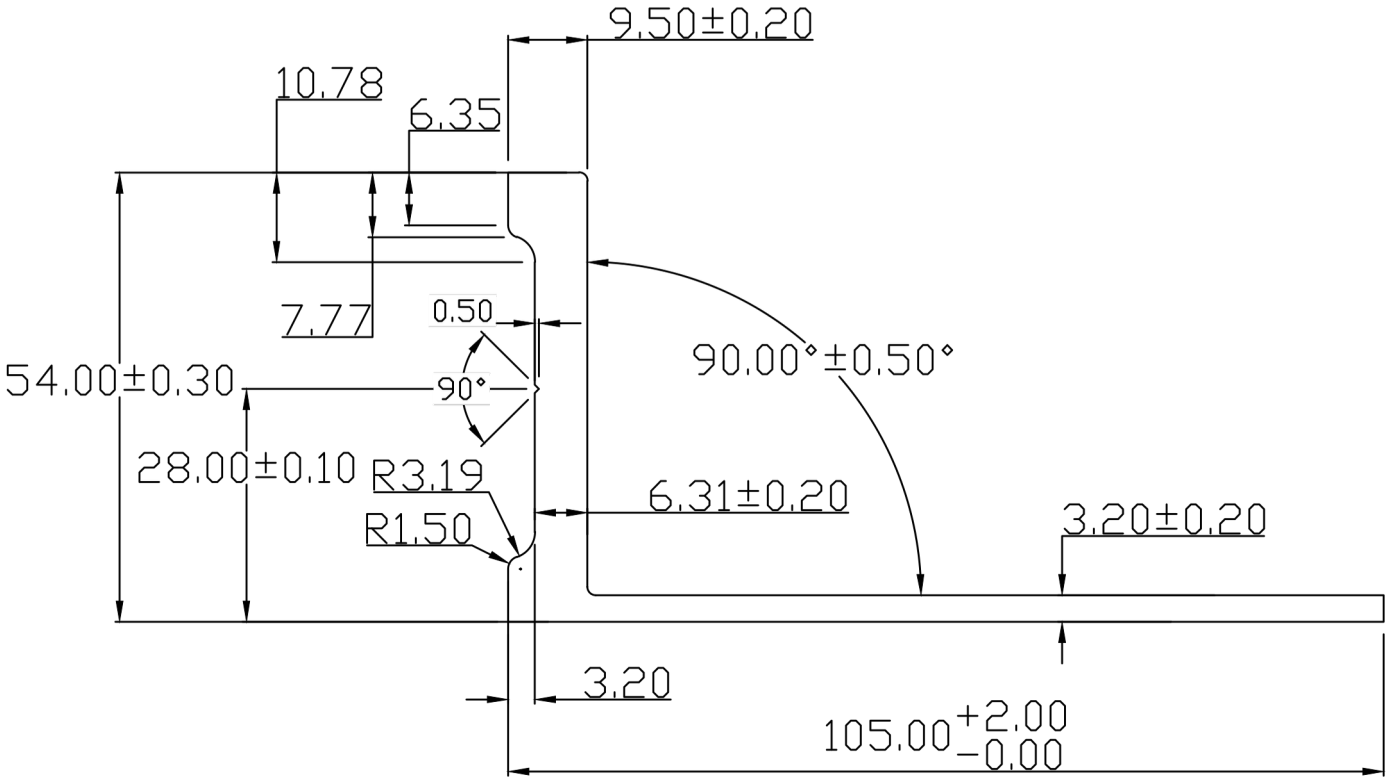

WITH DIN ISO 2768-1 class C = Coarse							
Dimension Longitudional	0.5 - 33 - 6 ±0.2 ±0.4	±0.3	6 - 30 ±0.5	30-120 ±0.8	120-400 ±1.2		
Degree radius & chamfer	0.5 - 33 - 6		6 - 30 ±2.0	30-120 ±0.8	±0°15°		
	±1.0 at 10	10-50	50-120120-400over 400				

NOTE:- ALL DIMENSIONS ARE IN mm.

AREA:- 698.2368 Sqmm^	ALLOY/TEMPER:- 6061 T6	
EX PERIMETER:- 320.3550 MM	FLATNESS:-±1.0mm^	DATE:-
WEIGHT:- 6.900 Kg/12'	TOLERANCES:	PARTY NAME:-
DESCRIPTION:-	ANGULARITY:-±1.0°	(M) No.:-
PARTY DRG NO:- 105 X 54 ANGLE	straightness:-1.00mm/meter	APPROVED BY:-
SECTION NO:- NP-264	TWIST:-1.00mm/meter	SCALE:- 1:1

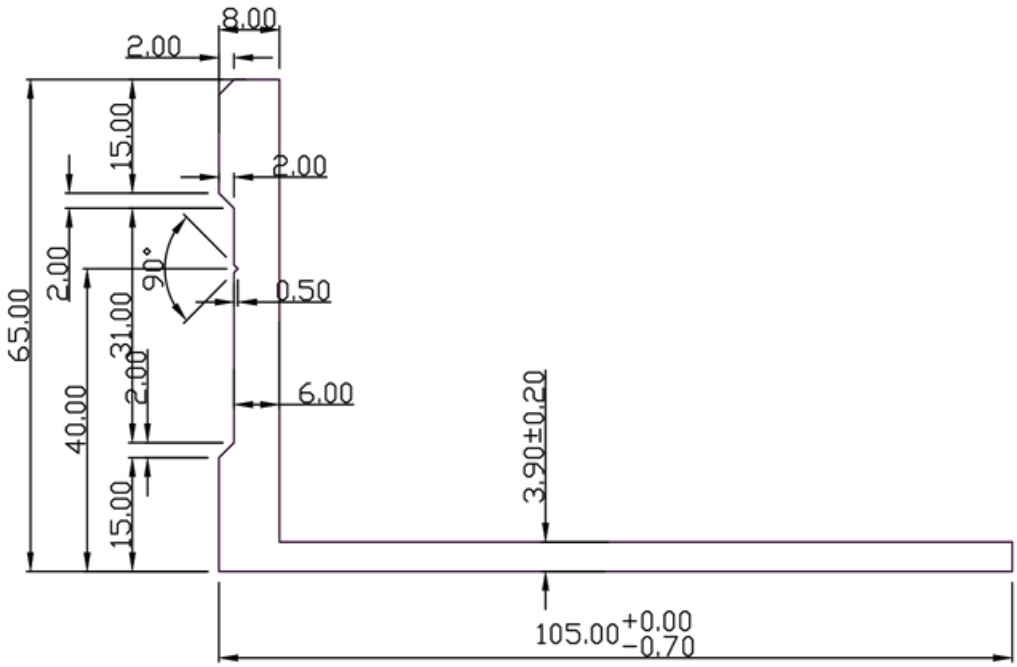

WITH DIN ISO 2768-1 class C = Coarse	Dimension Longitudional	0.5 - 33 - 6 ±0.2 ±0.4	±0.3	6 - 30 ±0.5	30-120 ±0.8	120-400 ±1.2		
	Degree & Chamfer	0.5 - 33 - 6		6 - 30 ±2.0	30-120 ±0.8	±0°15°		
	Radius	±1.0 at 10	10-50	50-120	120-400	over 400		

NOTE:- ALL DIMENSIONS ARE IN mm.

AREA:- 830.0500 Sqmm^	ALLOY/TEMPER:- 6061 T6	
EX PERIMETER:- 340.8995 MM	FLATNESS:-±0.9mm^	
WEIGHT:- 2.2411 Kg/Mtr.	TOLERANCES:	
DESCRIPTION:-	ANGULARITY:-±1.4°	(M) No.:-
PARTY DRG. No.:-	straightness:-1.50mm/meter	APPROVED BY:-
SECTION NO:- NP-374	TWIST:-2.50mm/meter	SCALE:- 1:1

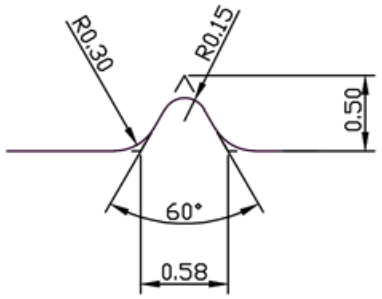

DETAIL:- A

V = V grove 0.50 x 60°

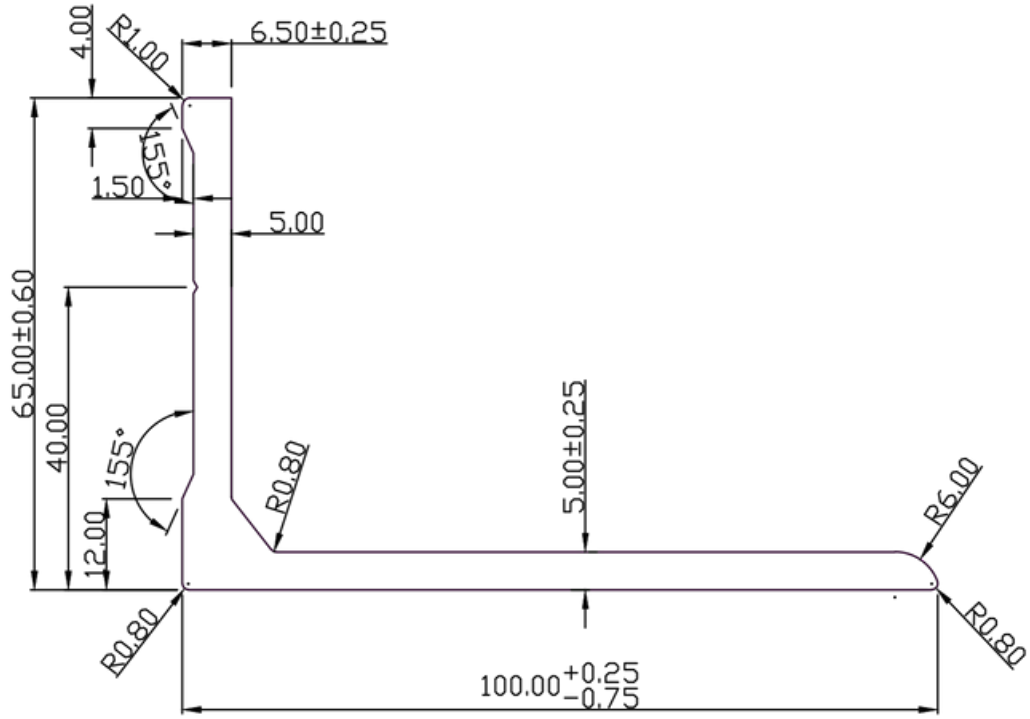

WITH DIN ISO 2768-1 class C = Coarse							
Dimension Longitudional	0.5 - 33 - 6 ±0.2 ±0.4	±0.3	6 - 30 ±0.5	30-120 ±0.8	120-400 ±1.2		
Degree Angle & Chamfer	0.5 - 33 - 6		6 - 30 ±2.0	30-120 ±0.8	±0°15°		
	±1.0 at 10	10-50	50-120	120-400	over 400		

NOTE:- ALL DIMENSIONS ARE IN mm.

AREA:- 833.5644 Sqmm^	ALLOY/TEMPER:- 6061 T6	
EX PERIMETER:- 323.8412 MM	FLATNESS:-±0.45mm^	
WEIGHT:- 2.2506 Kg/Mtr.	TOLERANCES:	
DESCRIPTION:-	ANGULARITY:-±1.0°	(M) No.:-
PARTY DRG. No.:- 1113	straightness:-1.00mm/meter	APPROVED BY:-
SECTION NO:- NP-391	TWIST:-1.00mm/meter	SCALE:- 1:1

Global Solutions For Aluminium Extrusions

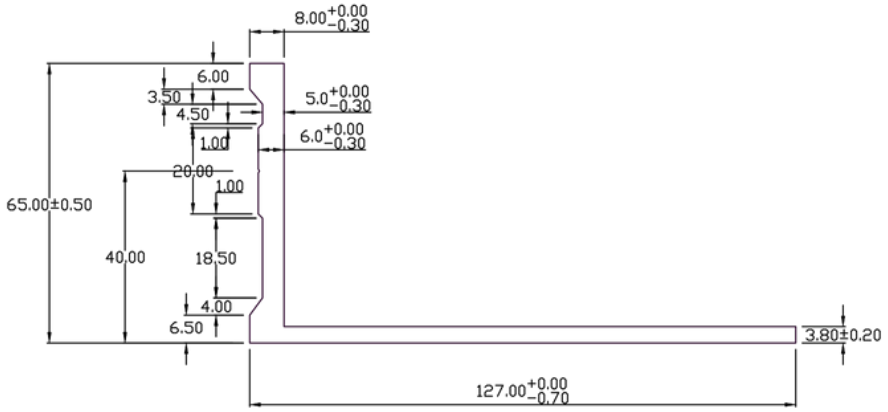

UNSPECIFIED TOLERANCES WILL BE IN ACCORDANCE WITH IS 1852 : 2000

Dimension	0.5 - 33 - 6	6 - 30	30-120	120-400	400-1000
Longitudional	±0.2 ±0.4	±0.3	6 - 30 ±0.5	30-120 ±0.8	120-400 ±1.2
Machining Allowance	0.5 - 33 - 6 ±2.0		6 - 30 ±2.0 ±1°	30-120 ±0.8	
Roughness	±1.0 at 10		10-50	50-120	120-400 over 400

NOTE:- UNSPECIFIED RADIUS:- 0.30 mm.
NOTE:- ALL DIMENSIONS ARE IN mm.

AREA:- 847.6143 Sqmm^	ALLOY/TEMPER:- 6061 T6	
EX PERIMETER:- 388.0432 MM	FLATNESS:-±0.7mm^	
WEIGHT:- 2.2885 Kg/Mtr.	TOLERANCES:	PARTY NAME:-
DESCRIPTION:- AS PER DRAWING	ANGULARITY:-±1°	(M) No.:-
	straightness:-1.50meter	APPROVED BY:-
SECTION NO:- NP-290	TWIST:-1.50mm/meter	SCALE:- 1:1

Need Zero tolerance for 125 mm

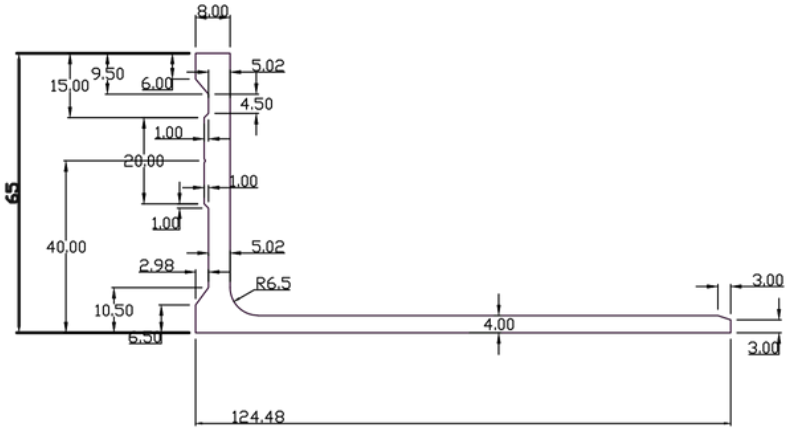

UNSPECIFIED TOLERANCES WILL BE IN ACCORDANCE WITH DIN 16901 FOR A-Class Cores										
Dimension Longitudional	0.5 - 33 - 6 ±0.2	±0.3	6 - 30 ±0.5	30-90-120 ±0.8	120-400 ±1.2	400-1000 ±2.0				
Angularity	0.5 - 33 - 6 ±0.4	±1.0	6 - 30 ±2.0	30-120 ±0.8						
Mm/Degree/Meter	at 10	10-50	50-120	120-400	over 400					

NOTE:- UNSPECIFIED RADIUS:- 0.30 mm.
NOTE:- ALL DIMENSIONS ARE IN mm.

AREA:- 868.9012 Sqmm^	ALLOY/TEMPER:- 6061 T6	
EX PERIMETER:- 378.3757 MM	FLATNESS:-±0.7mm^	
WEIGHT:- 2.3460 Kg/Mtr.	TOLERANCES:	
DESCRIPTION:- AS PER DRAWING	ANGULARITY:-±1°	(M) No.:-
	straightness:-1.50meter	APPROVED BY:-
SECTION NO:- NP-174	TWIST:-1.50mm/meter	SCALE:- 1:1

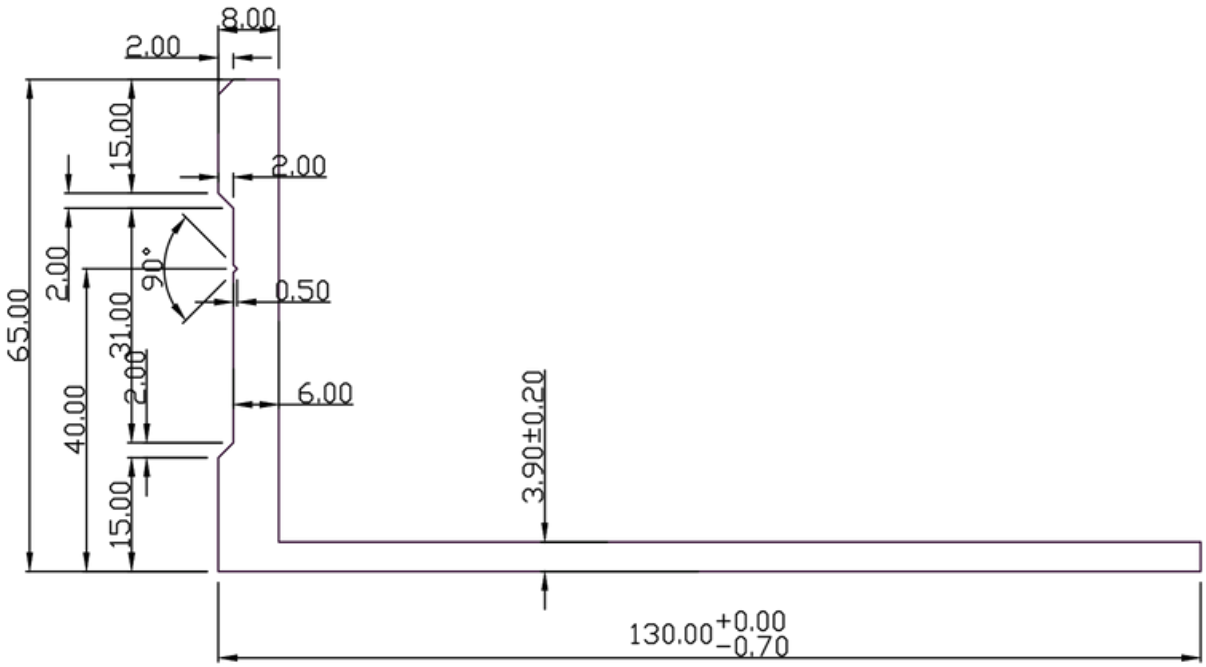

WITH DIN ISO 2768-1 class C = Coarse

Dimension	0.5 - 33 - 6	6 - 30	30-120	120-400
Longitudional	±0.2 ±0.4	±0.3	±0.5	±0.8	±1.2
Degree & Chamfer	0.5 - 33 - 6		6 - 30	30-120	±0°15°
Radius	±1.0 at 10	10-50	50-120	120-400	over 400

NOTE:- ALL DIMENSIONS ARE IN mm.

AREA:- 927.5500 Sqmm^	ALLOY/TEMPER:- 6061 T6	
EX PERIMETER:- 390.8995 MM	FLATNESS:-±0.9mm^	
WEIGHT:- 2.5043 Kg/Mtr.	TOLERANCES:	
DESCRIPTION:-	ANGULARITY:-±1.4°	(M) No.:-
PARTY DRG. No.:-	straightness:-1.50mm/meter	APPROVED BY:-
SECTION NO:- NP-373	TWIST:-2.50mm/meter	SCALE:- 1:1

Global Solutions For Aluminium Extrusions

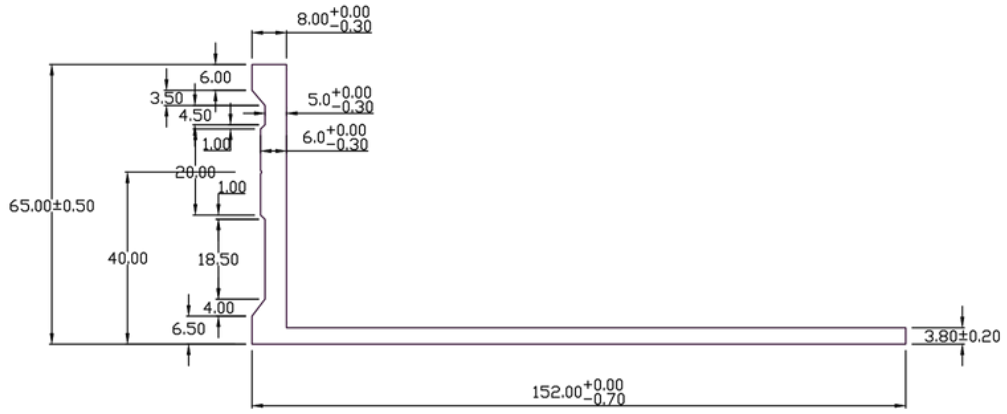

UNSPECIFIED TOLERANCES WILL BE IN ACCORDANCE WITH DIN 1685 T2 FOR A CLASS COARSE

Dimension	0.5 - 33 - 6	6 - 30	6 - 30	30-120	120-400	400-1000
Longitudional	±0.2	±0.3	±0.5	±0.8	±1.2	±2.0
Angular	0.5 - 33 - 6 ±0.4		6 - 30 ±2.0 ±2°	30-120 ±0.8		
Radius	at 10 ±1.0	10-50	50 - 120	120-400	over 400	

NOTE:- UNSPECIFIED RADIUS:- 0.30 mm.
NOTE:- ALL DIMENSIONS ARE IN mm.

AREA:- 942.6143 Sqmm^	ALLOY/TEMPER:- 6061 T6	
EX PERIMETER:- 437.0432 MM	FLATNESS:-±0.7mm^	
WEIGHT:- 2.5450 Kg/Mtr.	TOLERANCES:	PARTY NAME:-
DESCRIPTION:- AS PER DRAWING	ANGULARITY:-±1°	(M) No.:-
	straightness:-1.50meter	APPROVED BY:-
SECTION NO:- NP-291	TWIST:-1.50mm/meter	SCALE:- 1:1

Need Zero tolerance for 150 mm

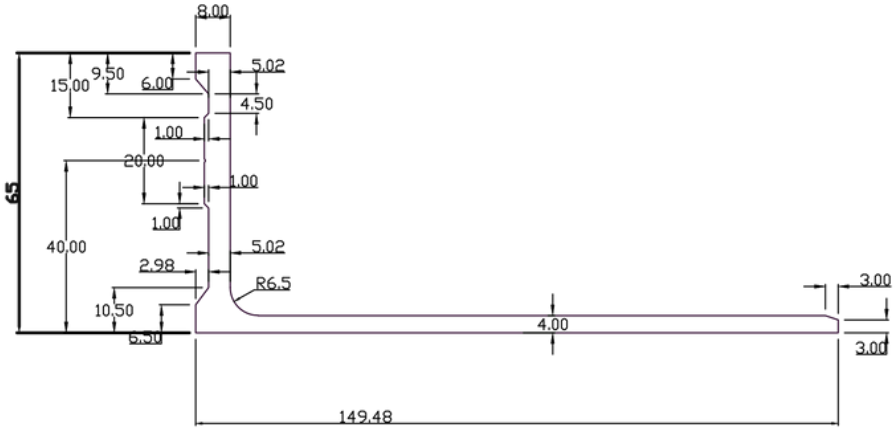

UNSPECIFIED TOLERANCES WILL BE IN ACCORDANCE WITH DIN 16901 ISO 2768-1 Class Coarse

Dimension Longitudional	0.5 - 33 - 6 ±0.2	±0.3	6 - 30 ±0.5	30-90 ±0.8	90-120 ±0.8	120-400 ±1.2	400-1000 ±2.0
Angularity	0.5 - 33 - 6 ±0.4	±1.0	6 - 30 ±2.0	±1° 30-120 ±0.8			
Roundness	at 10	10-50	50-120	120-400	over 400		

NOTE:- UNSPECIFIED RADIUS:- 0.30 mm.
NOTE:- ALL DIMENSIONS ARE IN mm.

AREA:- 968.9012 Sqmm^	ALLOY/TEMPER:- 6061 T6	
EX PERIMETER:- 428.3757 MM	FLATNESS:-±0.7mm^	
WEIGHT:- 2.6160 Kg/Mtr.	TOLERANCES:	
DESCRIPTION:- AS PER DRAWING	ANGULARITY:-±1°	(M) No.:-
	straightness:-1.50meter	APPROVED BY:-
SECTION NO:- NP-173	TWIST:-1.50mm/meter	SCALE:- 1:1

Global Solutions For Aluminium Extrusions

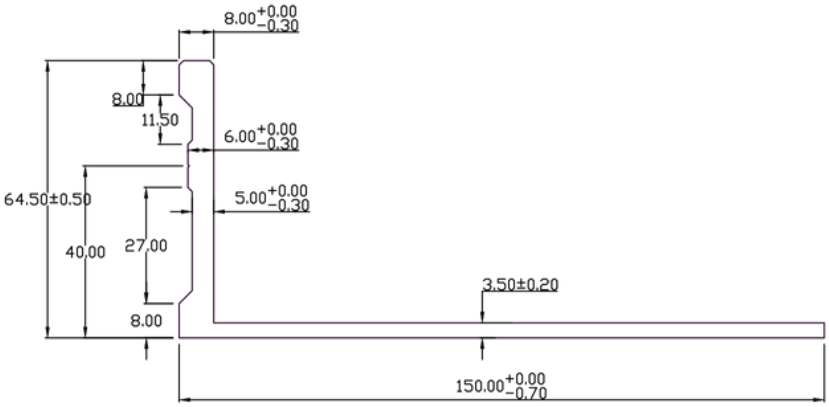

UNSPECIFIED TOLERANCES WILL BE IN ACCORDANCE WITH DIN 16901 Grade C

Dimension	0.5 - 33 - 6	6 - 30	6 - 30 ±1°	30-120	120-400	400-1000
Longitudional	±0.2 ±0.4	±0.3	±0.5	±0.8	±1.2	±2.0
Roundness & angular Measurements	0.5 - 33 - 6 ±1.0 at 10		6 - 30 ±2.0 ±1°	30-120 ±0.8		
		10-50	50-120	120-400	over 400	

±30°
±15°

NOTE:- UNSPECIFIED RADIUS:- 0.30 mm.
NOTE:- ALL DIMENSIONS ARE IN mm.

AREA:- 886.4100 Sqmm^	ALLOY/TEMPER:- 6061 T6	
EX PERIMETER:- 431.3907 MM	FLATNESS:-±0.7mm^	
WEIGHT:- 2.3933 Kg/Mtr.	TOLERANCES:	PARTY NAME:-
DESCRIPTION:- AS PER DRAWING	ANGULARITY:-±1°	(M) No.:-
PARTY DRG NO:- 150 X 65	straightness:-1.50meter	APPROVED BY:-
SECTION NO:- NP-300	TWIST:-1.50mm/meter	SCALE:- 1:1

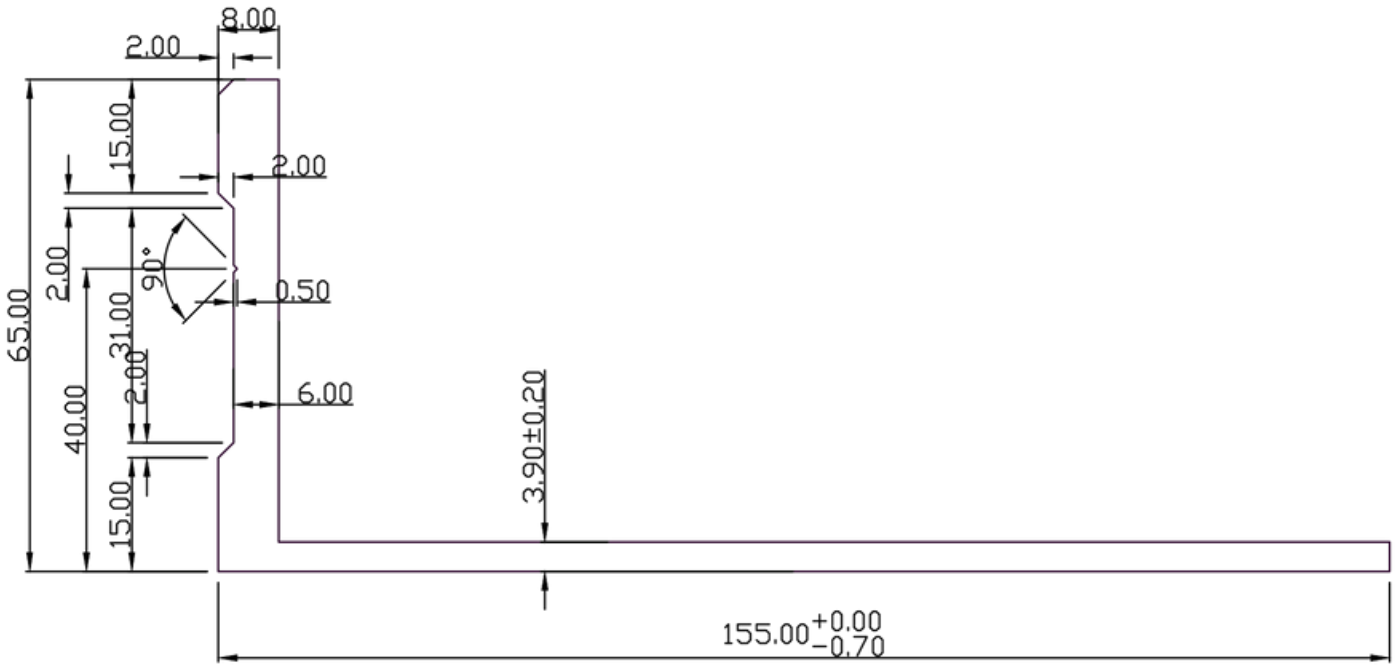

WITH DIN ISO 2768-1 class C = Coarse						
Dimension Longitudional	0.5 - 33 - 6 ±0.2 ±0.4	±0.3	6 - 30 ±0.5	30-120 ±0.8	120-400 ±1.2	
Degree Radius & Chamfer	0.5 - 33 - 6		6 - 30 ±2.0	30-120 ±0.8	±0°15°	
	±1.0 at 10	10-50	50-120	120-400	over 400	

NOTE:- ALL DIMENSIONS ARE IN mm.

AREA:- 1025.0500 Sqmm^	ALLOY/TEMPER:- 6061 T6	
EX PERIMETER:- 440.8995 MM	FLATNESS:-±0.9mm^	
WEIGHT:- 2.7676 Kg/Mtr.	TOLERANCES:	
DESCRIPTION:-	ANGULARITY:-±1.4°	(M) No.:-
PARTY DRG. No.:-	straightness:-1.50mm/meter	APPROVED BY:-
SECTION NO:- NP-372	TWIST:-2.50mm/meter	SCALE:- 1:1

Global Solutions For Aluminium Extrusions

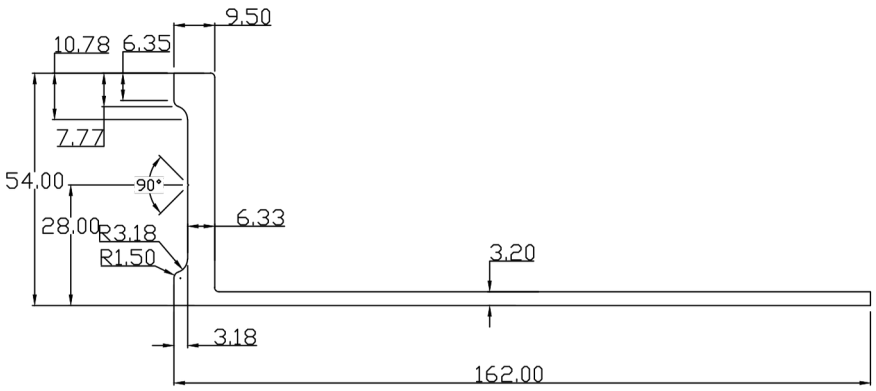

UNSPECIFIED TOLERANCES WILL BE IN ACCORDANCE WITH DIN ISO 2768-1 Fine / Medium / Coarse

Dimension	0.5 - 3	3 - 6	6 - 30	30-120	120-400	400-1000
Longitudional	±0.2	±0.3	±0.5	±0.8	±1.2	±2.0
Angle	0.5 - 3	3 - 6	6 - 30	30-120	over 400	
	±0.4	±1.0	±2.0	±0.8		
Roundness, Straightness, Flatness	at 10	10-50	50-120	120-400		

±30°
±15°

NOTE:- UNSPECIFIED RADIUS:- 0.30 mm.
NOTE:- ALL DIMENSIONS ARE IN mm.

AREA:- 881.5424 Sqmm^	ALLOY/TEMPER:- 6061 T6	
EX PERIMETER:- 434.1260 MM	FLATNESS:-±0.7mm^	
WEIGHT:- 2.380 Kg/Mtr.	TOLERANCES:	
DESCRIPTION:- AS PER DRAWING	ANGULARITY:-±1°	(M) No.:-
PARTY DRG NO:- 162 X 54 ANGLE	straightness:-1.50meter	APPROVED BY:-
SECTION NO:- NP-259	TWIST:-1.50mm/meter	SCALE:- 1:1

Global Solutions For Aluminium Extrusions

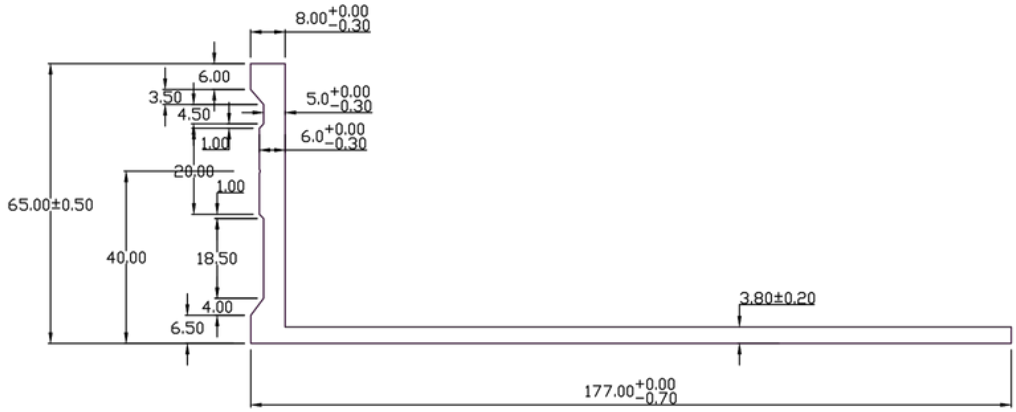

UNSPECIFIED TOLERANCES WILL BE IN ACCORDANCE WITH ASCE 27/28-2-1995 CODE

Dimension	6 - 30	30-90	90-120	120-400	400-1000
Longitudional	±0.3	±0.5	±0.8	±1.2	±2.0
Perpendicularity	0.5 - 33 - 6 ±0.2 ±0.4	6 - 30 ±2.0 ±2°	30-120 ±0.8		
Measurement between centers	0.5 - 33 - 6 ±1.0 at 10	10-50 ±1.0	50-120 ±1.0	120-400 over 400	

NOTE:- UNSPECIFIED RADIUS:- 0.30 mm.
NOTE:- ALL DIMENSIONS ARE IN mm.

AREA:- 1037.6143 Sqmm^	ALLOY/TEMPER:- 6061 T6	
EX PERIMETER:- 487.0432 MM	FLATNESS:-±0.7mm^	
WEIGHT:- 2.8015 Kg/Mtr.	TOLERANCES:	PARTY NAME:-
DESCRIPTION:- AS PER DRAWING	ANGULARITY:-±1°	(M) No.:-
	straightness:-1.50meter	APPROVED BY:-
SECTION NO:- NP-292	TWIST:-1.50mm/meter	SCALE:- 1:1

Global Solutions For Aluminium Extrusions

Need Zero tolerance for 175 mm

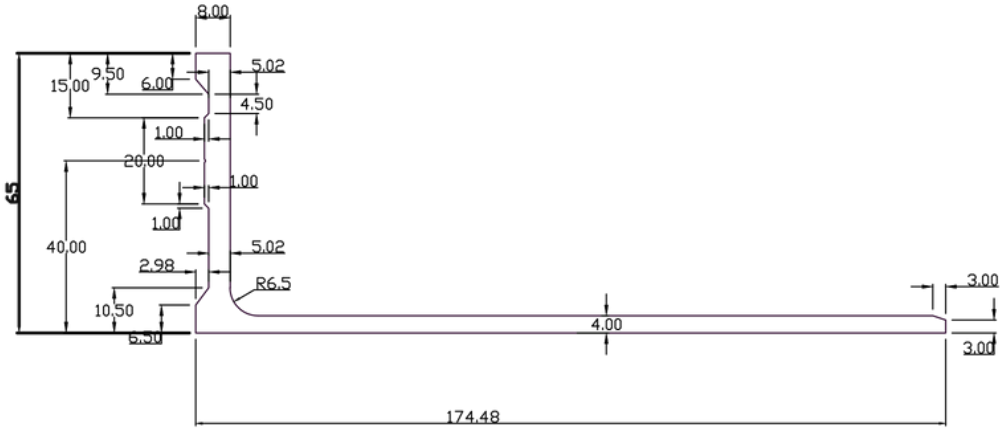

UNSPECIFIED TOLERANCES WILL BE IN ACCORDANCE WITH DIN ISO 2768-1 / IAS Co. Cover										
Dimension Longitudional	0.5 - 33 - 6 ±0.2	±0.3	6 - 30 ±0.5	30-120 ±0.8	120-400 ±1.2	400-1000 ±2.0				
Angularity	0.5 - 33 - 6 ±1.0 at 10	10-50	6 - 30 ±2.0 ±1°	30-120 ±0.8						
Mm/meter straightness		10-50	120	120-400	over 400					

±10°
±15°

NOTE:- UNSPECIFIED RADIUS:- 0.30 mm.
NOTE:- ALL DIMENSIONS ARE IN mm.

AREA:- 1068.9012 Sqmm^	ALLOY/TEMPER:- 6061 T6	
EX PERIMETER:- 478.3757 MM	FLATNESS:-±0.7mm^	
WEIGHT:- 2.8860 Kg/Mtr.	TOLERANCES:	
DESCRIPTION:- AS PER DRAWING	ANGULARITY:-±1°	(M) No.:-
	straightness:-1.50meter	APPROVED BY:-
SECTION NO:- NP-172	TWIST:-1.50mm/meter	SCALE:- 1:1

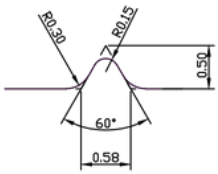

DETAIL:- A

V = V grove 0.50 x 60°

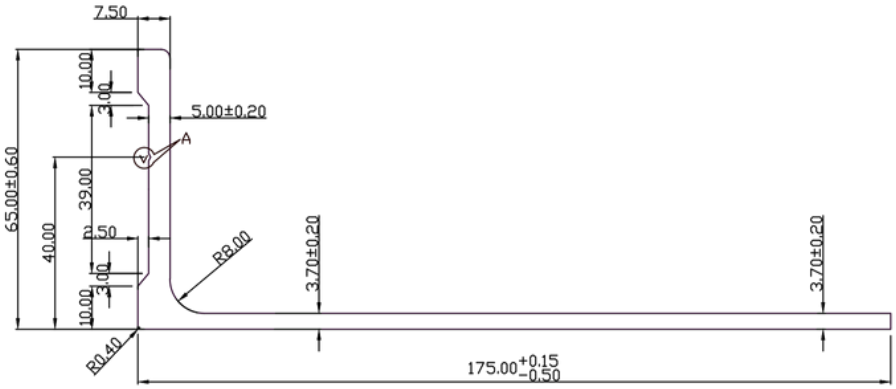

UNSPECIFIED TOLERANCES WILL BE IN ACCORDANCE WITH DIN ISO 2768-1 CLASS "c" & CONVEX									
Dimension Longitudional	0.5 - 33 - 6 ±0.2	±0.3	6 - 30 ±0.5	30-90 ±0.8	90-120 ±0.8	120-400 ±1.2	400-1000 ±2.0		
Dimension Transversal	0.5 - 33 - 6 ±0.4	±1.0	6 - 30 ±2.0	30-120 ±0.8					
Angularity	at 10	10-50	50-120	120-400	over 400				

±30°
±15°

NOTE:- UNSPECIFIED RADIUS:- 0.30 mm.
NOTE:- ALL DIMENSIONS ARE IN mm.

AREA:- 1014.6244 Sqmm^	ALLOY/TEMPER:- 6061 T6	
EX PERIMETER:- 477.4428 MM	FLATNESS:-±0.7mm^	
WEIGHT:- 2.7394 Kg/Mtr.	TOLERANCES:	
DESCRIPTION:- AS PER DRAWING	ANGULARITY:-±1°	(M) No.:-
PARTY DRG NO:- 1136	straightness:-1.00meter	APPROVED BY:-
SECTION NO:- NP-326	TWIST:-1.00mm/meter	SCALE:- 1:1

Global Solutions For Aluminium Extrusions

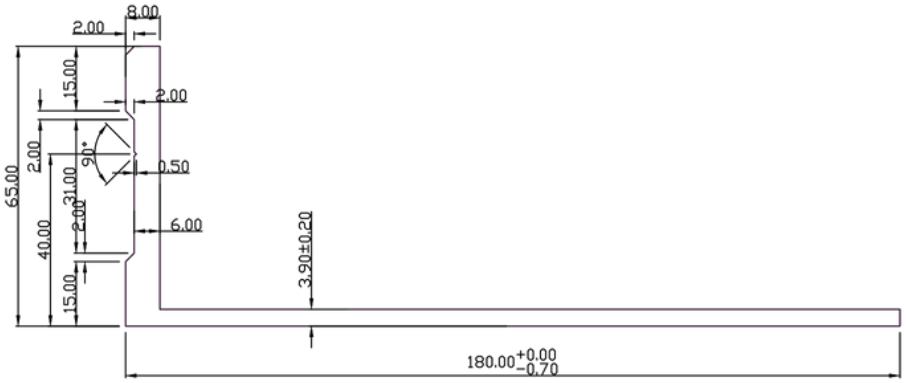

UNSPECIFIED TOLERANCES WILL BE IN ACCORDANCE WITH DIN ISO 2768-1 CLASS C-G CONLIC

Dimension Longitudional	0.5 - 33 - 6 ±0.2	±0.3	6 - 30 ±0.5	30-90-120 ±0.8	120-400 ±1.2	400-1000 ±2.0
Perpendicularity Mm/Mm	0.5 - 33 - 6 ±0.4	±1.0	6 - 30 ±2.0 ±1°	30-120 ±0.8		
Roundness	at 10	10-50	50-120	120-400	over 400	

±1°30'
±0°15'

NOTE:- UNSPECIFIED RADIUS:- 0.30 mm.
NOTE:- ALL DIMENSIONS ARE IN mm.

AREA:- 1122.5500 Sqmm^	ALLOY/TEMPER:- 6061 T6	
EX PERIMETER:- 490.8995 MM	FLATNESS:-±0.7mm^	
WEIGHT:- 3.0308 Kg/Mtr.	TOLERANCES:	
DESCRIPTION:- AS PER DRAWING	ANGULARITY:-±1°	(M) No.:-
PARTY DRG NO:-	straightness:-1.50meter	APPROVED BY:-
SECTION NO:- NP-371	TWIST:-1.50mm/meter	SCALE:- 1:1

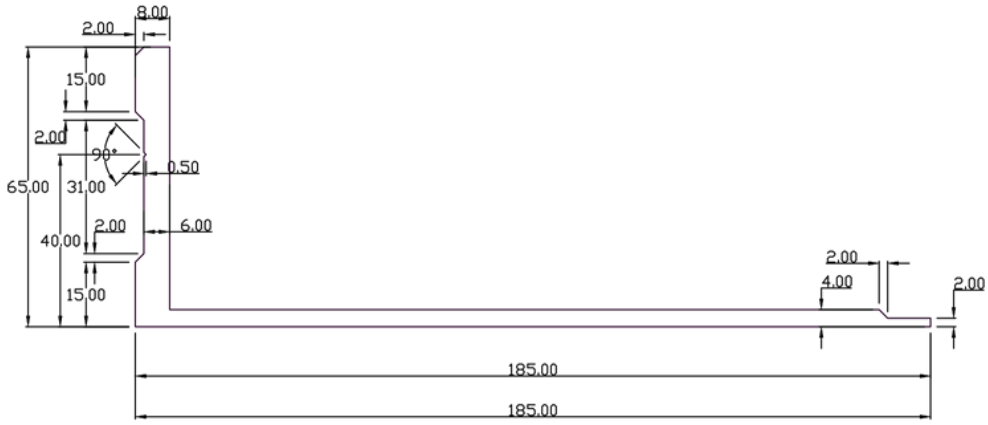

UNSPECIFIED TOLERANCES WILL BE IN ACCORDANCE WITH DIN 1685 T2 & T3 / ISO 2768 T1 & T2 CODE

Dimension	0.5 - 33 - 6	6 - 30	6 - 30	30-120	120-400	400-1000
Longitudional	±0.2 ±0.4	±0.3	±0.5 ±1°	±0.8 ±0.8	±1.2	±2.0
Mechanical Properties	0.5 - 33 - 6 ±1.0 at 10		10-50 50-120 120-400 over 400			

NOTE:- UNSPECIFIED RADIUS:- 0.30 mm.
NOTE:- ALL DIMENSIONS ARE IN mm.

AREA:- 1137.7500 Sqmm^	ALLOY/TEMPER:- 6061 T6	
EX PERIMETER:- 499.7279 MM	FLATNESS:-±0.7mm^	
WEIGHT:- 3.0719 Kg/Mtr.	TOLERANCES:	PARTY NAME:-
DESCRIPTION:- AS PER DRAWING	ANGULARITY:-±1°	(M) No.:-
PARTY DRG NO:- L SECTION-175	straightness:-1.50meter	APPROVED BY:-
SECTION NO:- NP-296	TWIST:-1.50mm/meter	SCALE:- 1:1

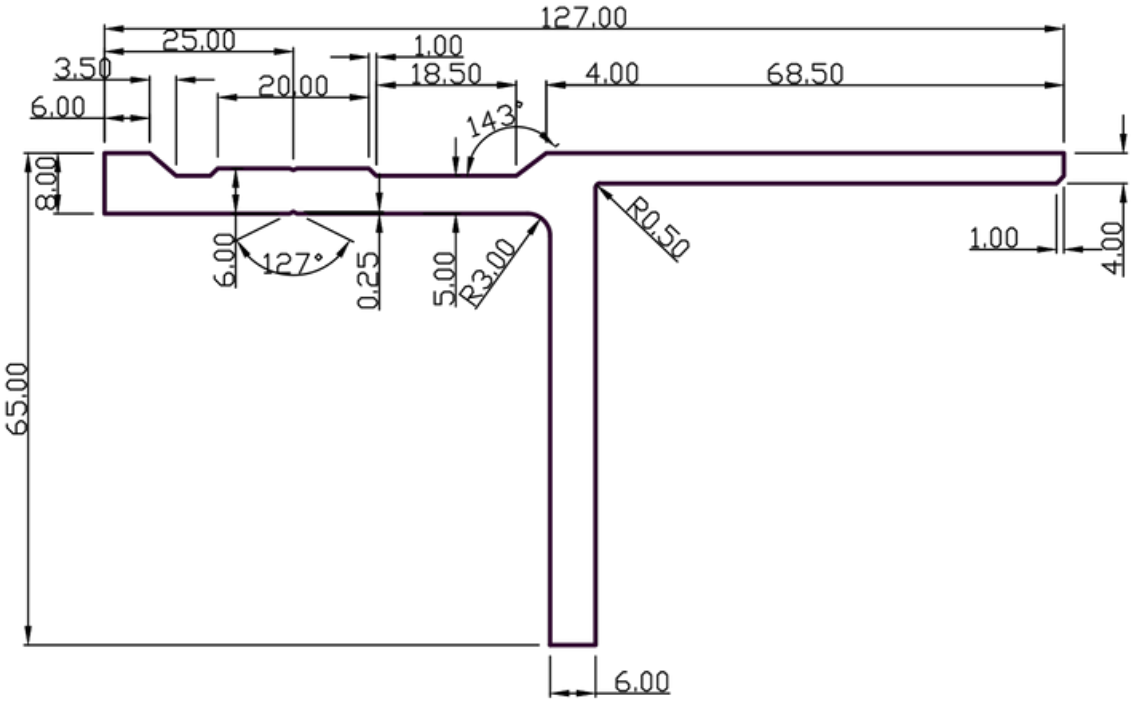

Dimension Longitudional	0.5 - 33 - 6 ±0.2 ±0.4	±0.3	6 - 30 ±0.5	30-120 ±0.8	120-400 ±1.2
Degree & Chamfer	0.5 - 33 - 6		6 - 30 ±2.0	30-120 ±0.8	±0°15°
Radius	±1.0 at 10	10-50	50-120120-400over 400		

WITH DIN ISO 2768-1 class C = Coarse

NOTE:- ALL DIMENSIONS ARE IN mm.

AREA:- 985.9851 Sqmm^	ALLOY/TEMPER:- 6061 T6	
EX PERIMETER:- 385.0563 MM	FLATNESS:-±0.9mm^	
WEIGHT:- 2.6621 Kg/Mtr.	TOLERANCES:	
DESCRIPTION:-	ANGULARITY:-±1.4°	(M) No.:-
PARTY DRG. No.:-	straightness:-1.50mm/meter	APPROVED BY:-
SECTION NO:- NP-356	TWIST:-2.50mm/meter	SCALE:- 1:1

Global Solutions For Aluminium Extrusions

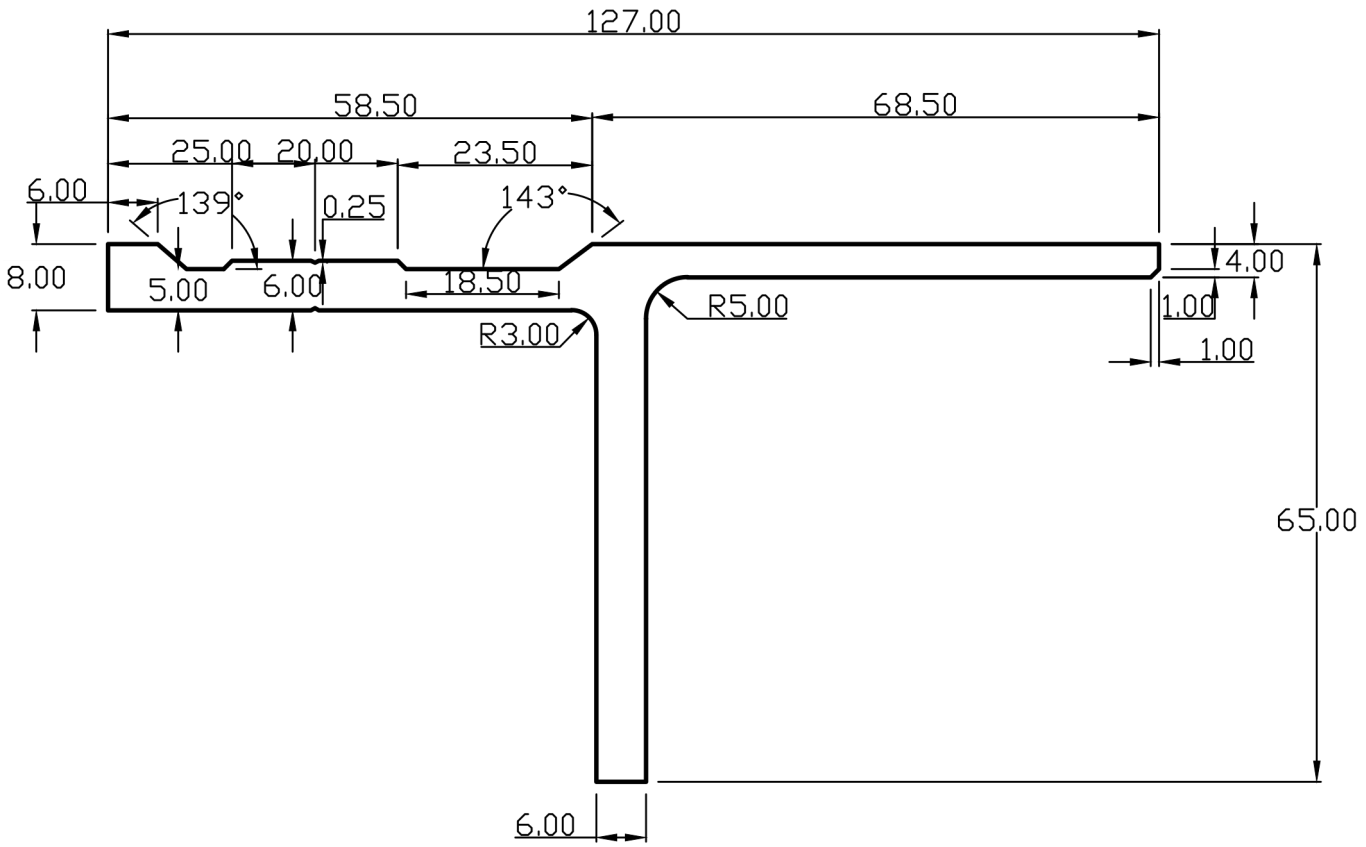

WITH DIN ISO 2768-1 class C = Coarse						
Dimension Longitudional	0.5 - 33 - 6 ±0.2	±0.3	6 - 30 ±0.5	30-120 ±0.8	120-400 ±1.2	
Degree Angle & Chamfer	0.5 - 33 - 6 ±0.4	±1.0	6 - 30 ±2.0	30-120 ±0.8	±0°15°	
	at 10	10-50	50-120120-400over 400			

NOTE:- ALL DIMENSIONS ARE IN mm.

AREA:- 991.2965 Sqmm^	ALLOY/TEMPER:- 6061 T6	
EX PERIMETER:- 387.6549 MM	FLATNESS:-±1.0mm^	DATE:-
WEIGHT:- 9.796 Kg/12'	TOLERANCES:	PARTY NAME:-
DESCRIPTION:-	ANGULARITY:-±1.0°	(M) No.:-
PARTY DRG NO:-	straightness:-1.00mm/meter	APPROVED BY:-
SECTION NO:- NP-268	TWIST:-1.00mm/meter	SCALE:- 1:1

Global Solutions For Aluminium Extrusions

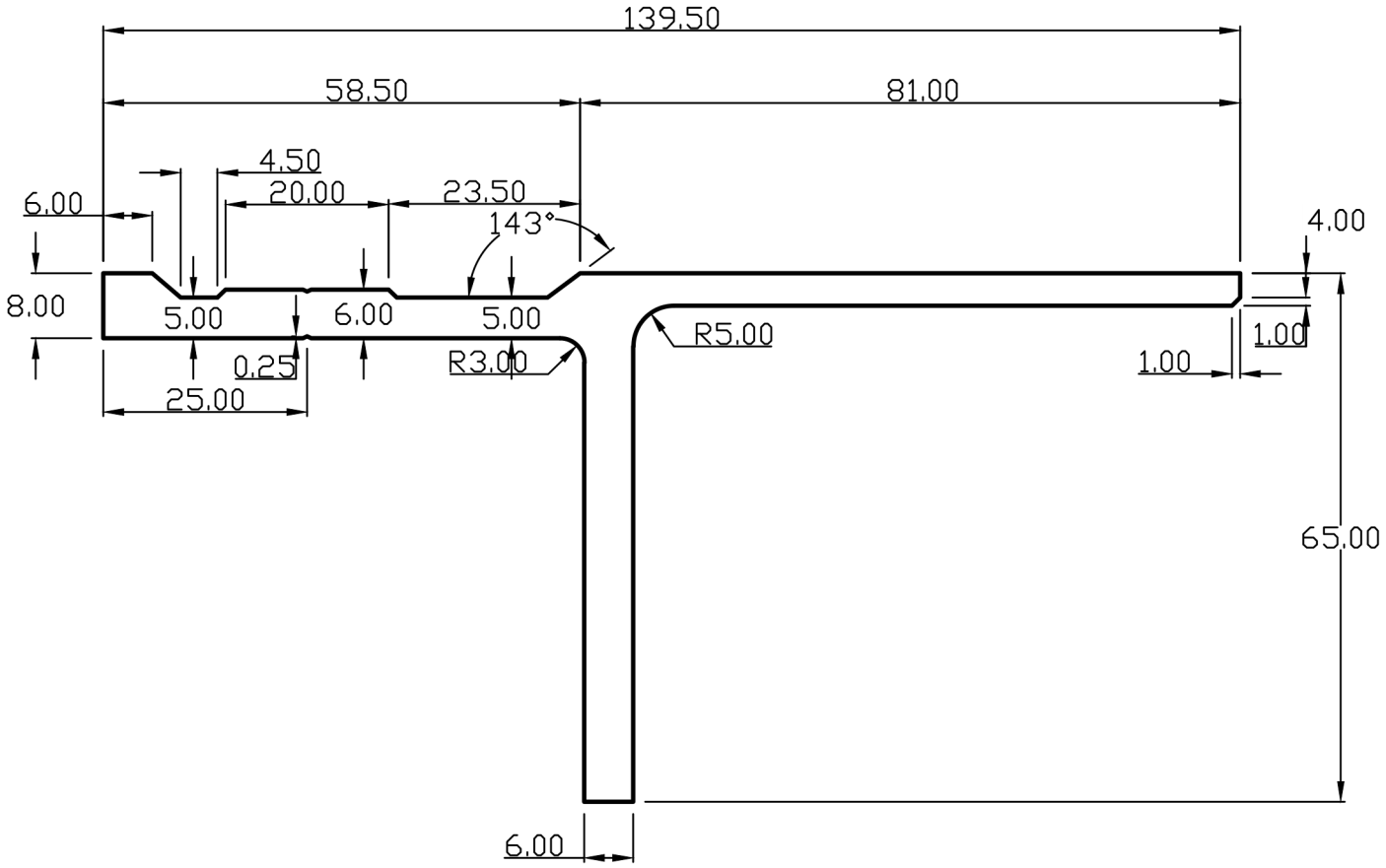

WITH DIN ISO 2768-1 class C = Coarse

Dimension	0.5 - 33 - 6	±0.3	6 - 30	30-120	120-400
Longitudional	±0.2		±0.5	±0.8	±1.2
Degree	0.5 - 33 - 6	±1.0	6 - 30	30-120	±0°15°
Degree & Chamfer	±0.4		±2.0	±0.8	
	at 10	10-50	50-120120-400	over 400	

NOTE:- ALL DIMENSIONS ARE IN mm.

AREA:- 1041.2965 Sqmm^	ALLOY/TEMPER:- 6061 T6	
EX PERIMETER:- 412.6549 MM	FLATNESS:-±1.0mm^	DATE:-
WEIGHT:- 10.290 Kg/12'	TOLERANCES:	PARTY NAME:-
DESCRIPTION:-	ANGULARITY:-±1.0°	(M) No.:-
PARTY DRG NO:-	straightness:-1.00mm/meter	APPROVED BY:-
SECTION NO:- NP-269	TWIST:-1.00mm/meter	SCALE:- 1:1

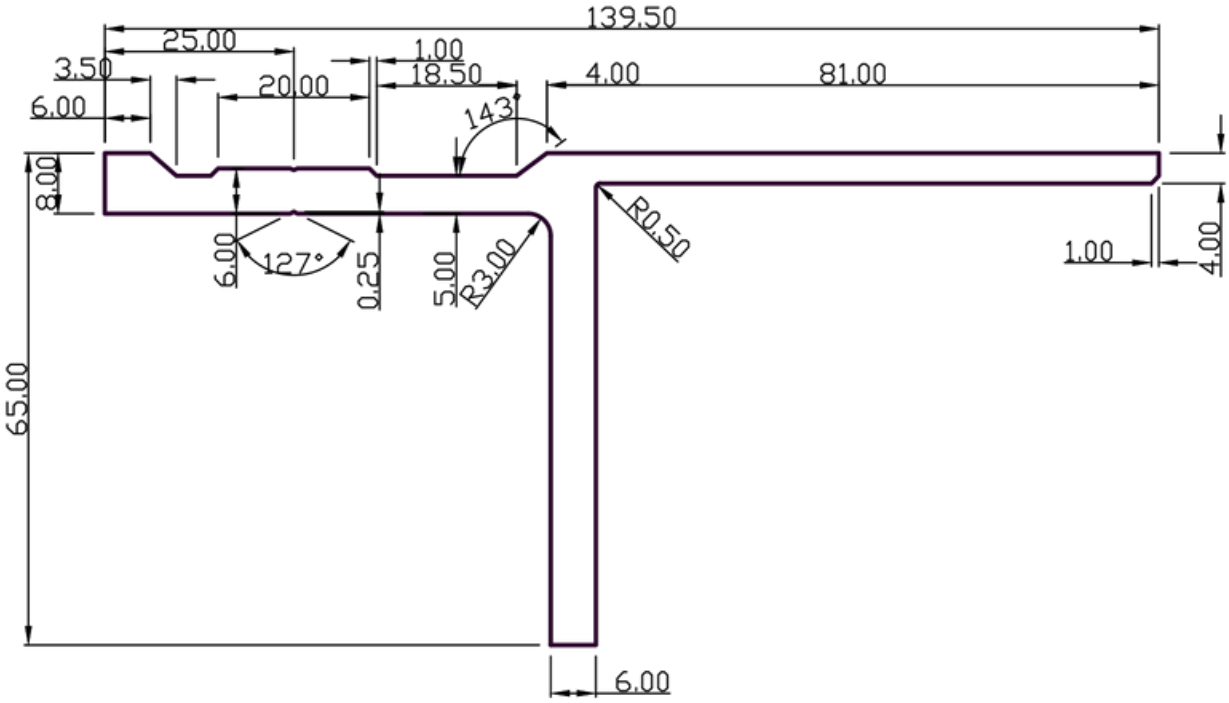

WITH DIN ISO 2768-1 class C = Coarse

Dimension Longitudional	0.5 - 33 - 6 ±0.2 ±0.4	±0.3	6 - 30 ±0.5	30-120 ±0.8	120-400 ±1.2
Degree & Chamfer	0.5 - 33 - 6		6 - 30 ±2.0	30-120 ±0.8	±0°15°
Radius	±1.0 at 10	10-50	50-120120-400over 400		

NOTE:- ALL DIMENSIONS ARE IN mm.

AREA:- 1035.9851 Sqmm^	ALLOY/TEMPER:- 6061 T6	
EX PERIMETER:- 410.0863 MM	FLATNESS:-±0.9mm^	
WEIGHT:- 2.7971 Kg/Mtr.	TOLERANCES:	
DESCRIPTION:-	ANGULARITY:-±1.4°	(M) No.:-
PARTY DRG. No.:-	straightness:-1.50mm/meter	APPROVED BY:-
SECTION NO:- NP-357	TWIST:-2.50mm/meter	SCALE:- 1:1

Global Solutions For Aluminium Extrusions

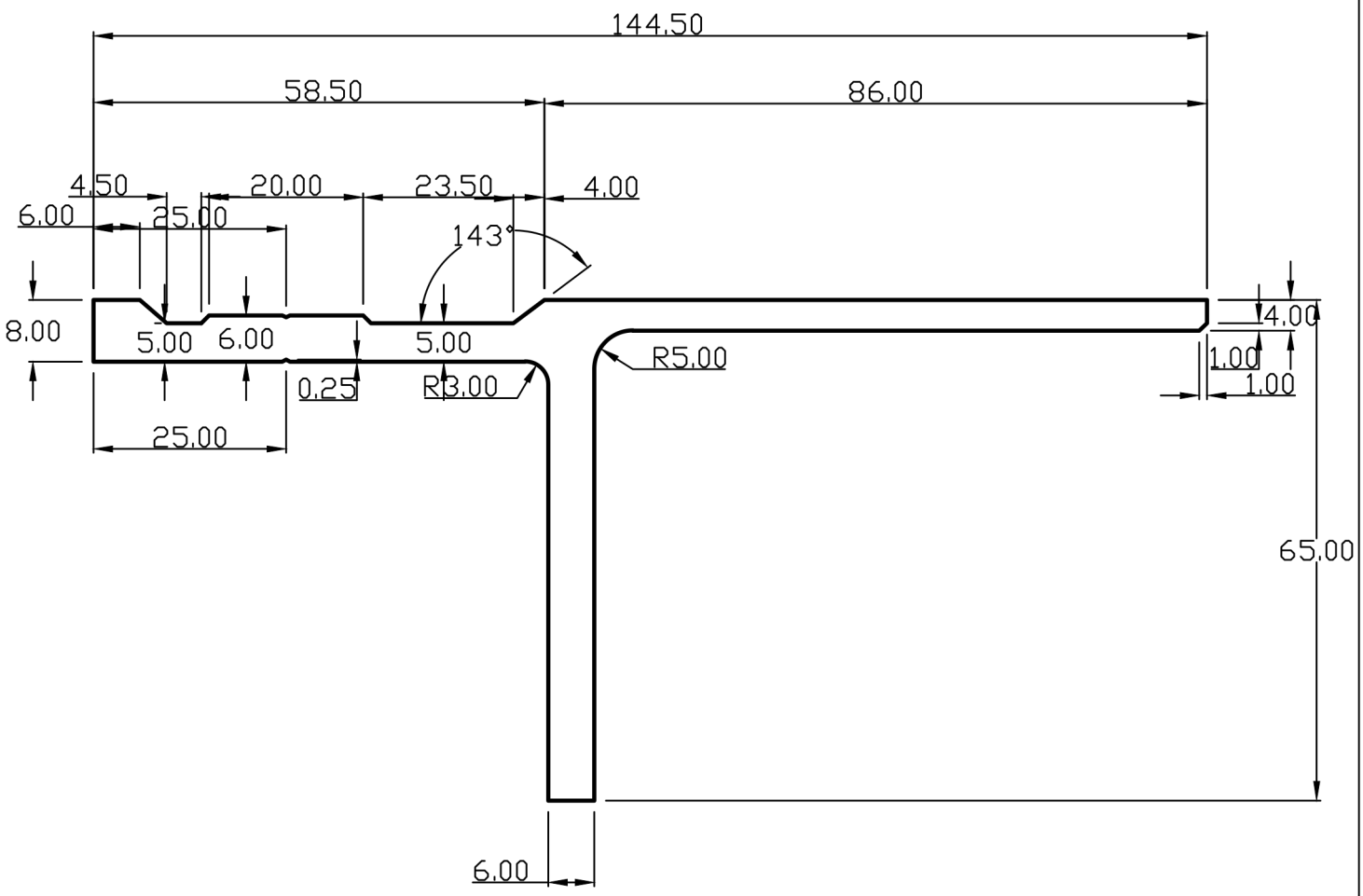

WITH DIN ISO 2768-1 class C = Coarse

Dimension	0.5 - 33 - 6	6 - 30	30-120	120-400
Longitudional	±0.2 ±0.4	±0.5	±0.8	±1.2
Degree	0.5 - 33 - 6	6 - 30	30-120	±0°15°
Radius & Chamfer	±1.0 at 10	50-120120-400	400over 400	
	10-50			

NOTE:- ALL DIMENSIONS ARE IN mm.

AREA:- 1061.2965 Sqmm^	ALLOY/TEMPER:- 6061 T6	
EX PERIMETER:- 422.6549 MM	FLATNESS:-±1.0mm^	DATE:-
WEIGHT:- 10.488 Kg/12'	TOLERANCES:	PARTY NAME:-
DESCRIPTION:-	ANGULARITY:-±1.0°	(M) No.:-
PARTY DRG NO:-	straightness:-1.00mm/meter	APPROVED BY:-
SECTION NO:- NP-270	TWIST:-1.00mm/meter	SCALE:- 1:1

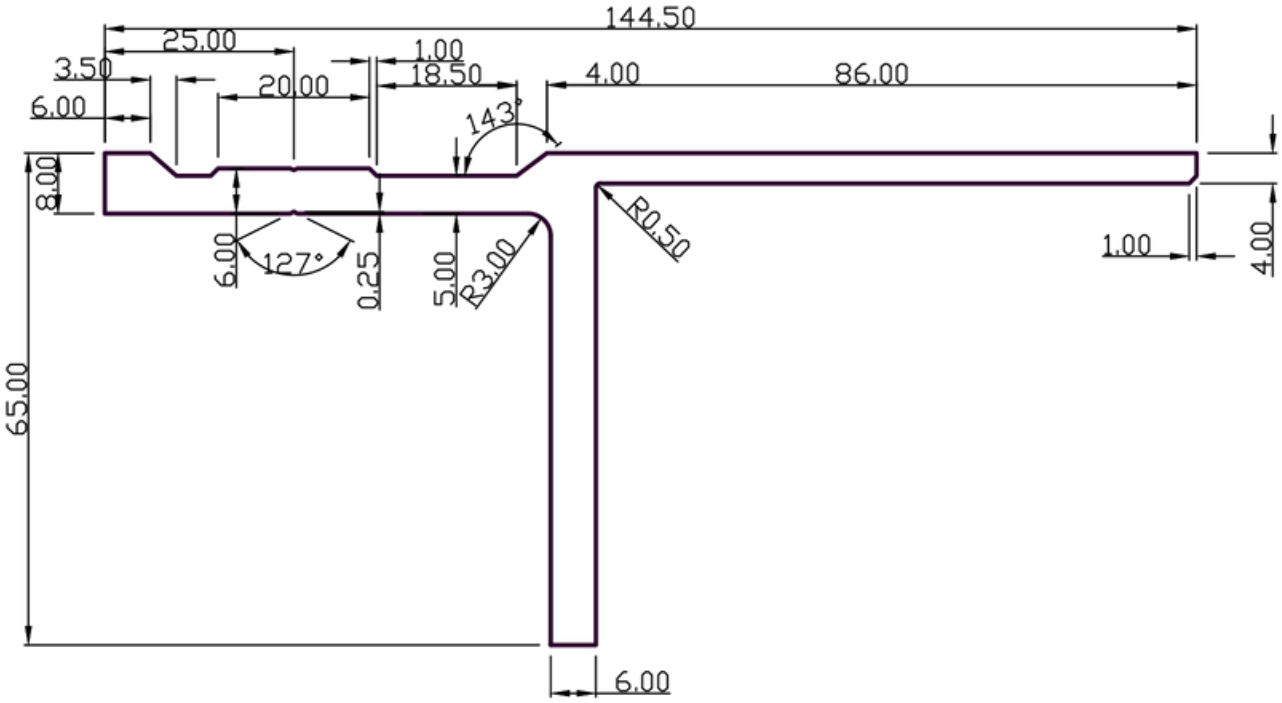

Dimension Longitudional	0.5 - 33 - 6 ±0.2 ±0.4	±0.3	6 - 30 ±0.5	30-120 ±0.8	120-400 ±1.2
Degree & Chamfer	0.5 - 33 - 6		6 - 30 ±2.0	30-120 ±0.8	±0°15°
Radius	±1.0 at 10	10-50	50-120120-400over 400		

WITH DIN ISO 2768-1 class C = Coarse

NOTE:- ALL DIMENSIONS ARE IN mm.

AREA:- 1055.9851 Sqmm^	ALLOY/TEMPER:- 6061 T6	
EX PERIMETER:- 420.0863 MM	FLATNESS:-±0.9mm^	
WEIGHT:- 2.8511 Kg/Mtr.	TOLERANCES:	
DESCRIPTION:-	ANGULARITY:-±1.4°	(M) No.:-
PARTY DRG. No.:-	straightness:-1.50mm/meter	APPROVED BY:-
SECTION NO:- NP-358	TWIST:-2.50mm/meter	SCALE:- 1:1

Global Solutions For Aluminium Extrusions

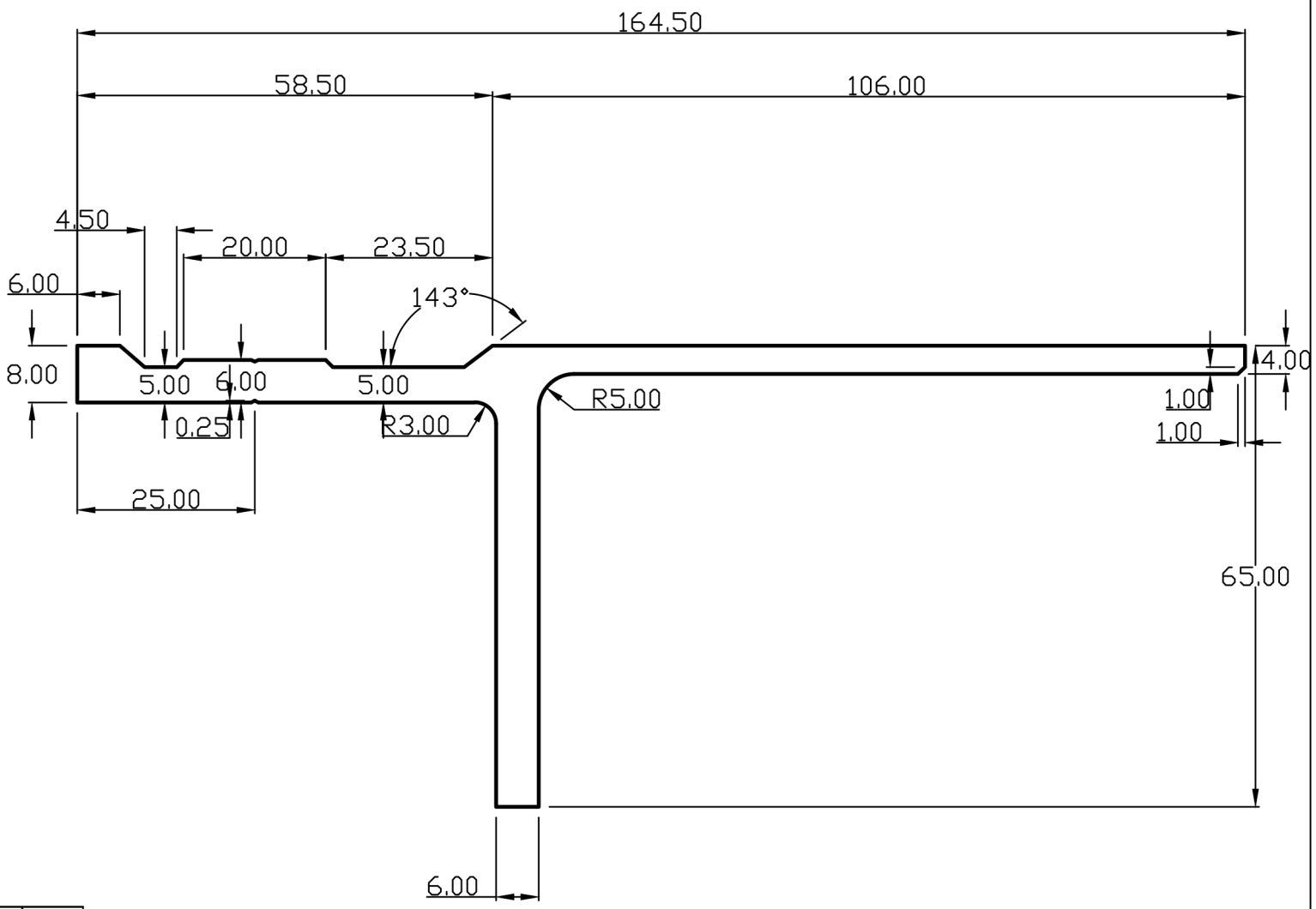

WITH DIN ISO 2768-1 class C = Coarse

Dimension	0.5 - 33 - 6	6 - 30	30-120	120-400
Longitudional	±0.2	±0.5	±0.8	±1.2
Degree	0.5 - 33 - 6	6 - 30	30-120	±0°15°
Angularity & Chamfer	±0.4	±2.0	±0.8	
	at 10	10-50	50-120120-400over 400	

NOTE:- ALL DIMENSIONS ARE IN mm.

AREA:- 1141.2965 Sqmm^	ALLOY/TEMPER:- 6061 T6	
EX PERIMETER:- 462.6549 MM	FLATNESS:-±1.0mm^	DATE:-
WEIGHT:- 11.279 Kg/12'	TOLERANCES:	PARTY NAME:-
DESCRIPTION:-	ANGULARITY:-±1.0°	(M) No.:-
PARTY DRG NO:-	straightness:-1.00mm/meter	APPROVED BY:-
SECTION NO:- NP-271	TWIST:-1.00mm/meter	SCALE:- 1:1

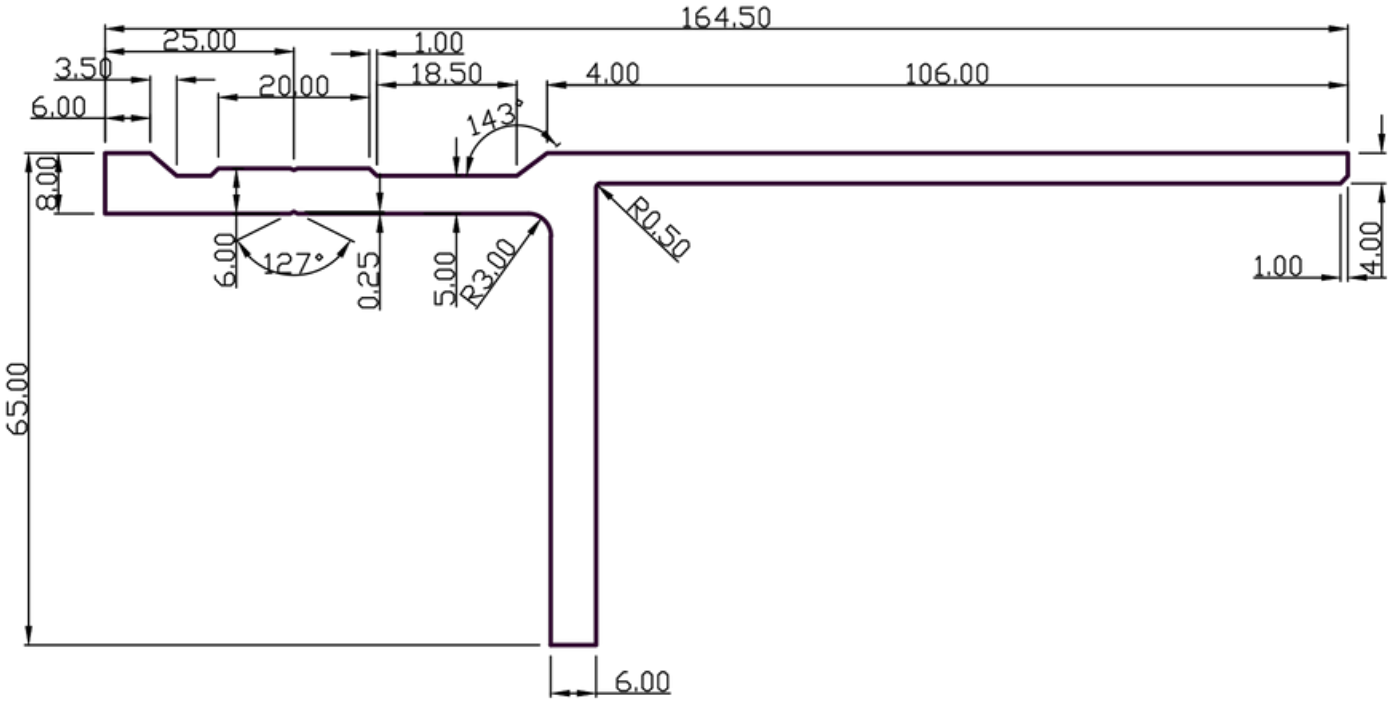

Dimension Longitudional	0.5 - 33 - 6 ±0.2 ±0.4	±0.3	6 - 30 ±0.5	30-120 ±0.8	120-400 ±1.2
Degree & Chamfer	0.5 - 33 - 6		6 - 30 ±2.0	30-120 ±0.8	±0°15°
Radius	±1.0 at 10	10-50	50-120120-400over 400		

WITH DIN ISO 2768-1 class C = Coarse

NOTE:- ALL DIMENSIONS ARE IN mm.

AREA:- 1135.9851 Sqmm^	ALLOY/TEMPER:- 6061 T6	
EX PERIMETER:- 460.0863 MM	FLATNESS:-±0.9mm^	
WEIGHT:- 3.0671 Kg/Mtr.	TOLERANCES:	
DESCRIPTION:-	ANGULARITY:-±1.4°	(M) No.:-
PARTY DRG. No.:-	straightness:-1.50mm/meter	APPROVED BY:-
SECTION NO:- NP-359	TWIST:-2.50mm/meter	SCALE:- 1:1

Global Solutions For Aluminium Extrusions

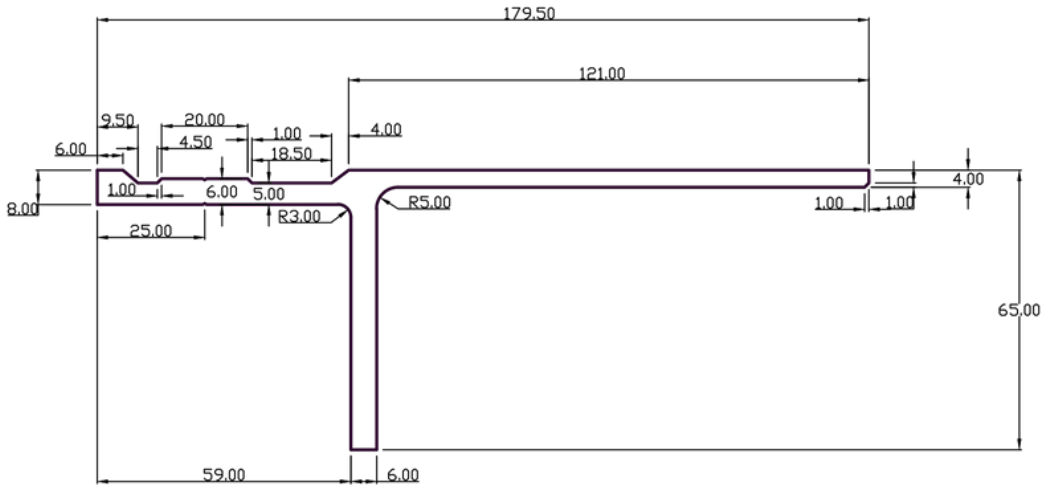

Dimension	0.5 - 33 - 6	6 - 30	6 - 30 ±1°	30-120	120-400	400-1000
Longitudional	±0.3	±0.5	±0.8	±0.8	±1.2	±2.0
Mouldings	0.5 - 33 - 6 ±0.4	6 - 30 ±2.0	±2°	30-120 ±0.8		
Dimensions transfer	±1.0 at 10	10-50	50-120	120-400	over 400	

UNSPECIFIED TOLERANCES WILL BE IN ACCORDANCE WITH DIN 16178 - 1 - 1985 - Cut - Cover

NOTE:- UNSPECIFIED RADIUS:- 0.30 mm.
NOTE:- ALL DIMENSIONS ARE IN mm.

AREA:- 1201.2965 Sqmm^	ALLOY/TEMPER:- 6061 T6	
EX PERIMETER:- 488.1549 MM	FLATNESS:-±0.7mm^	
WEIGHT:- 3.2435 Kg/Mtr.	TOLERANCES:	
DESCRIPTION:- AS PER DRAWING	ANGULARITY:-±1°	(M) No.:-
PARTY DRG NO:- BS-115	straightness:-1.50meter	APPROVED BY:-
SECTION NO:- NP-164	TWIST:-1.50mm/meter	SCALE:- 1:1

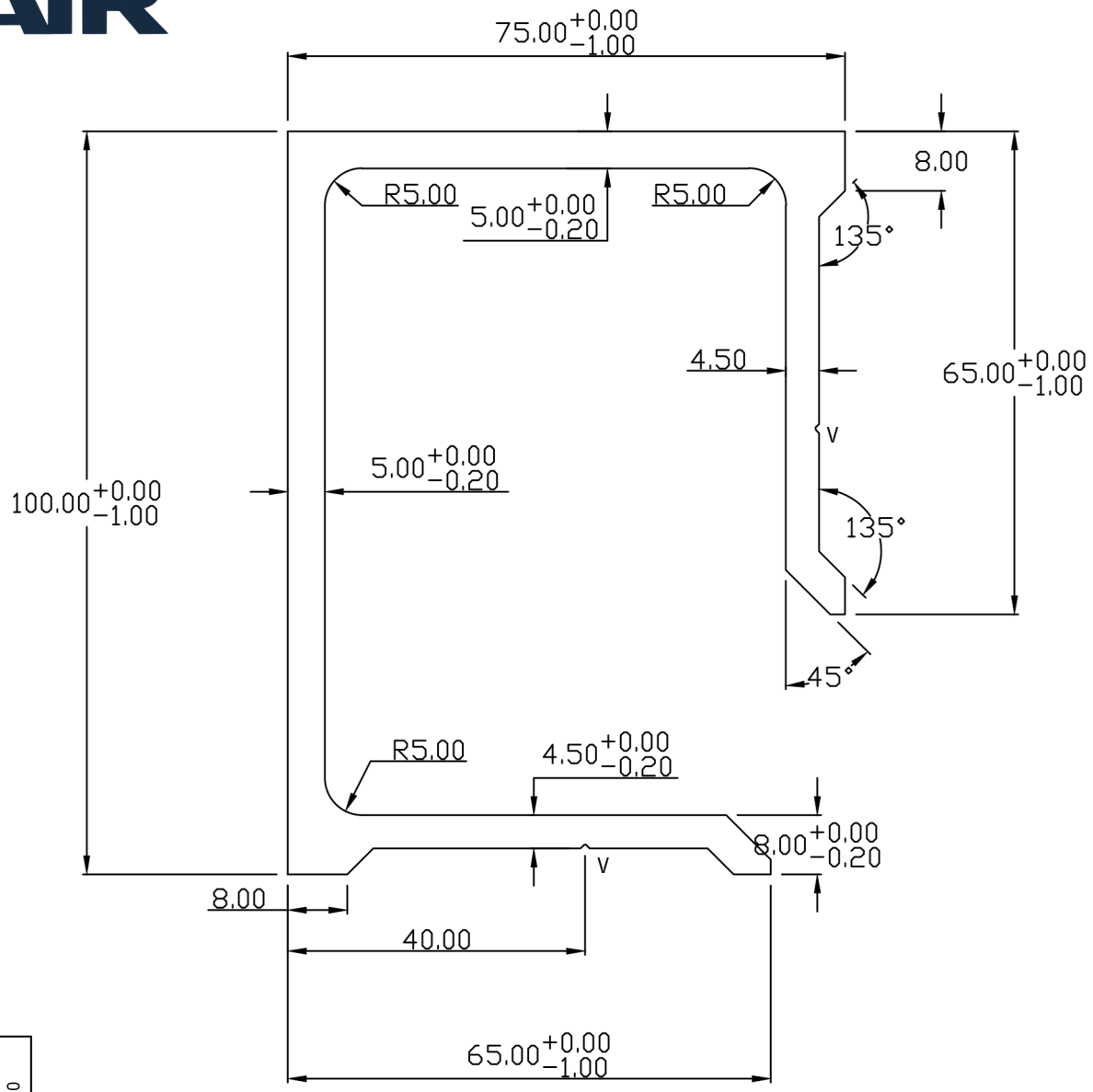

UNSPECIFIED TOLERANCES WILL BE IN ACCORDANCE WITH DIN ISO 2768-1 class C = Coarse

Dimension	0.5 - 33 - 6	6 - 30	30-120	120-400	400-1000
Longitudional	±0.2	±0.5	±0.8	±1.2	±2.0
Mm/mm Degree & Radius & Diameter	0.5 - 33 - 6 ±0.4	6 - 30 ±2.0	30-120 ±0.8		
	at 10	±1°	±1°		
		10-50	50-120	120-400	over 400
		±0°30'	±0°15'		

NOTE:- UNSPECIFIED RADIOUS ARE 0.3 mm.
NOTE:- ALL DIMENSIONS ARE IN mm.

AREA:- 1449.8544 Sqmm^	ALLOY/TEMPER:- 6061 T6	
EX PERIMETER:- 583.1083 MM	FLATNESS:-±0.8mm^	
WEIGHT:- 3.9146 Kg/Mtr.	TOLERANCES:	
DESCRIPTION:- CC 100X75	ANGULARITY:-±2°	CHECKED BY:-
PARTY DRG NO:-	straightness:-1.70meter	APPROVED BY:-
SECTION NO:- NP-76	TWIST:-1.70mm/meter	SCALE:- 1:1

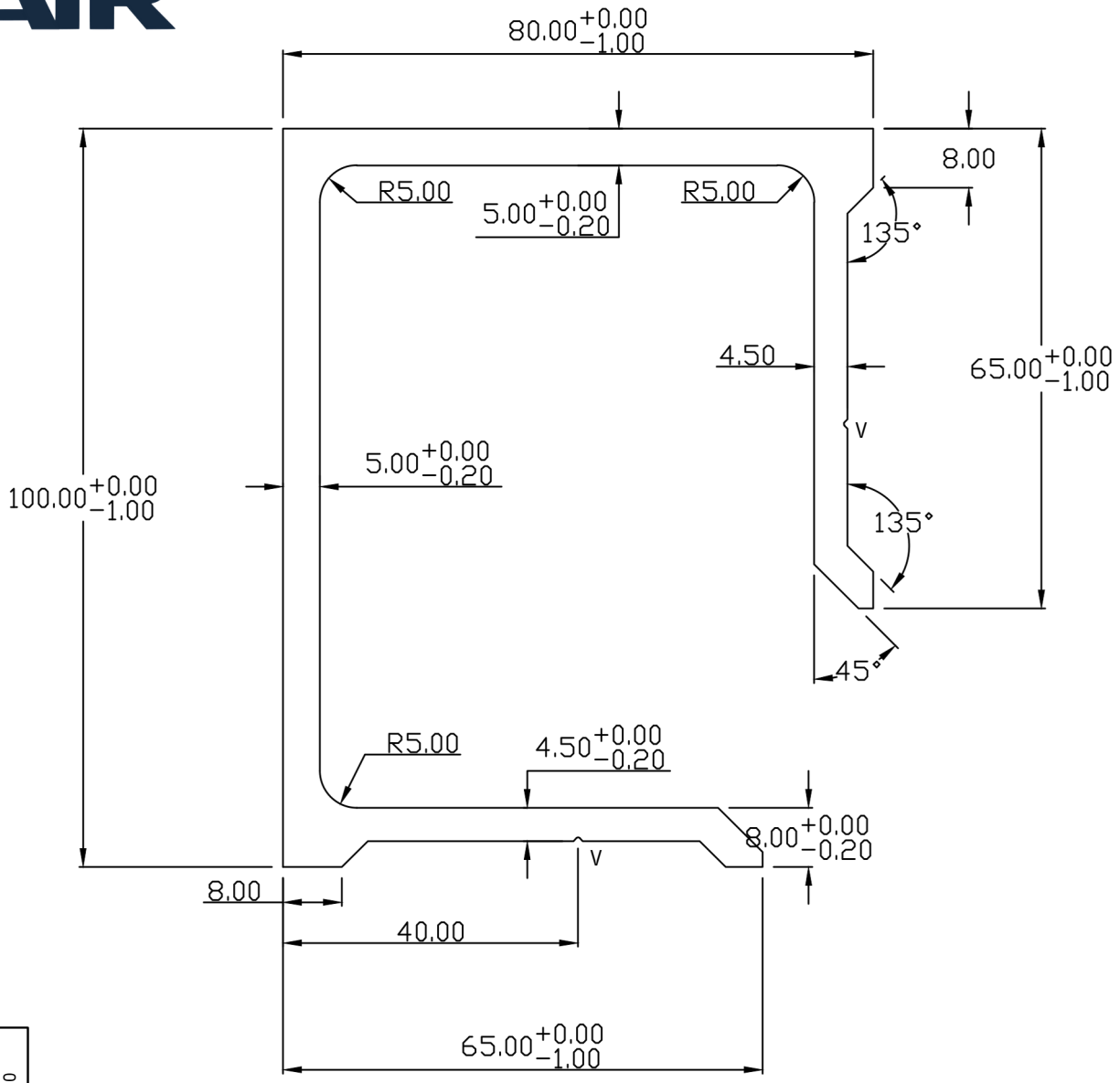

UNSPECIFIED TOLERANCES WILL BE IN ACCORDANCE WITH DIN ISO 2768-1 class C = Coarse

Dimension	0.5 - 33	6 - 30	30-120	120-400	400-1000
Longitudional	±0.2	±0.5	±0.8	±1.2	±2.0
Radius & Chamfer	±0.4	±0.3			
Angular	±1°	±30'	±15'		

Dimension	0.5 - 33	6 - 30	30-120	120-400	over 400
Radius & Chamfer	±0.4	±0.3			
Angular	±1°	±2°	±1°	±0°30'	±0°15'

NOTE:- UNSPECIFIED RADIOUS ARE 0.3 mm.
NOTE:- ALL DIMENSIONS ARE IN mm.

AREA:- 1474.8544 Sqmm^	ALLOY/TEMPER:- 6061 T6	
EX PERIMETER:- 593.1083 MM	FLATNESS:-±0.8mm^	
WEIGHT:- 3.9821 Kg/Mtr.	TOLERANCES:	
DESCRIPTION:- CC 100X80	ANGULARITY:-±2°	CHECKED BY:-
PARTY DRG NO:-	straightness:-1.70meter	APPROVED BY:-
SECTION NO:- NP-75	TWIST:-1.70mm/meter	SCALE:- 1:1

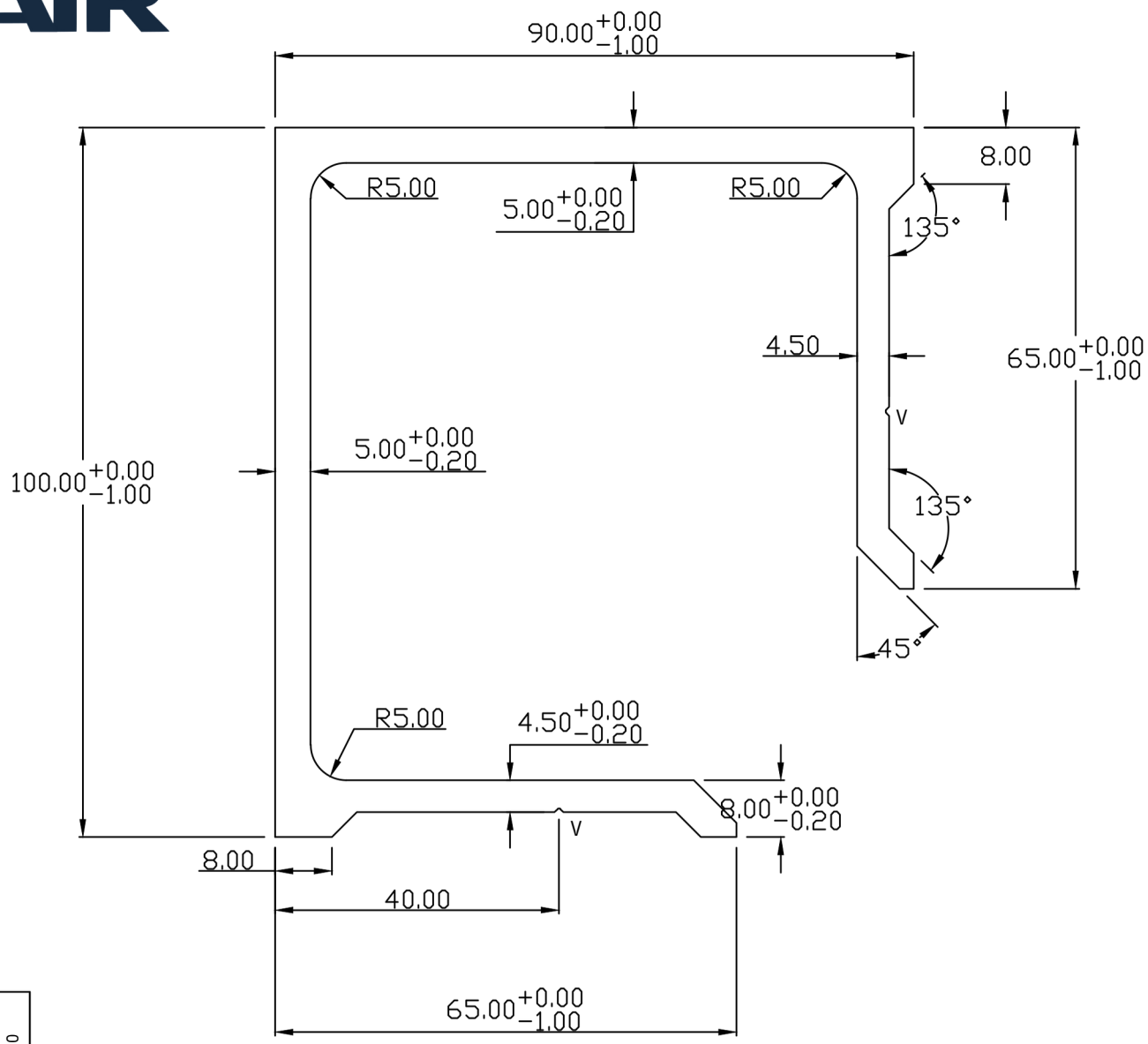

UNSPECIFIED TOLERANCES WILL BE IN ACCORDANCE WITH DIN ISO 2768-1 class C = Coarse

Dimension	0.5 - 33 - 6	6 - 30	30-120	120-400	400-1000
Longitudional	±0.2 ±0.4	±0.5	±0.8	±1.2	±2.0
Degree	0.5 - 33 - 6	6 - 30 ±1°	30-120 ±0.8		
Minutes & Diameter	±1.0 at 10	±2.0			

	10-50	50-120	120-400	over 400
	±0.3	±0.5	±0.8	±1.2
		±30°	±15°	

NOTE:- UNSPECIFIED RADIOUS ARE 0.3 mm.
NOTE:- ALL DIMENSIONS ARE IN mm.

AREA:- 1524.8544 Sqmm^	ALLOY/TEMPER:- 6061 T6	
EX PERIMETER:- 613.1083 MM	FLATNESS:-±0.8mm^	
WEIGHT:- 4.1171 Kg/Mtr.	TOLERANCES:	
DESCRIPTION:- CC 100X90	ANGULARITY:-±2°	CHECKED BY:-
PARTY DRG NO:-	straightness:-1.70meter	APPROVED BY:-
SECTION NO:- NP-73	TWIST:-1.70mm/meter	SCALE:- 1:1

Global Solutions For Aluminium Extrusions

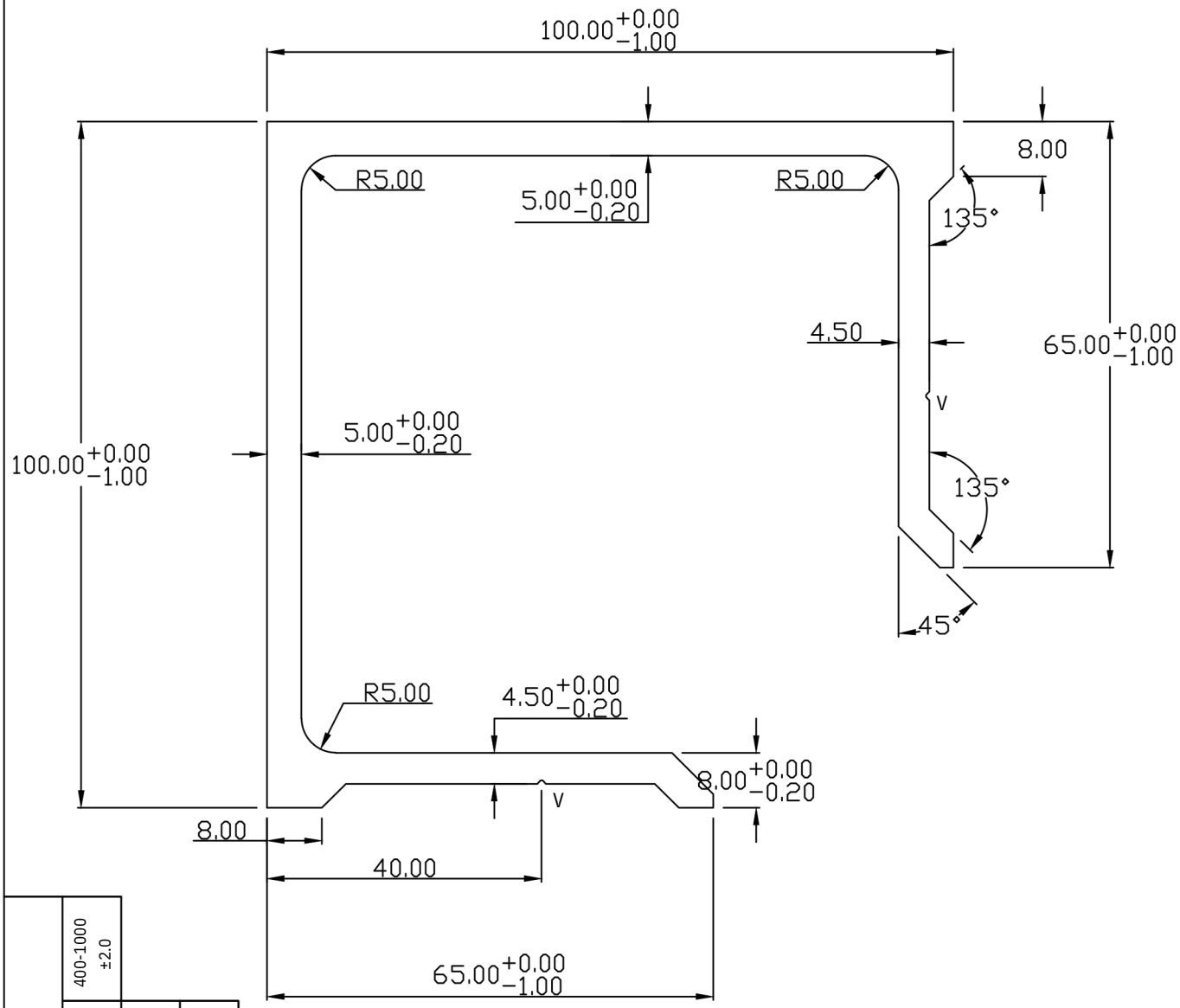

UNSPECIFIED TOLERANCES WILL BE IN ACCORDANCE WITH DIN ISO 2768-1 class C = Coarse

Dimension	0.5 - 33 - 6	6 - 30	30-120	120-400	400-1000
Longitudional	±0.2	±0.5	±0.8	±1.2	±2.0
Degree & Minutes	0.5 - 33 - 6 ±0.4	6 - 30 ±2.0 ±1°	30-120 ±0.8		
Radius & Diamter	at 10	10-50	50-120	120-400	over 400
		±1.0	±30°	±15°	

NOTE:- UNSPECIFIED RADIOUS ARE 0.3 mm.
NOTE:- ALL DIMENSIONS ARE IN mm.

AREA:- 1574.8544 Sqmm^	ALLOY/TEMPER:- 6061 T6	
EX PERIMETER:- 633.1083 MM	FLATNESS:-±0.8mm^	
WEIGHT:- 4.2521 Kg/Mtr.	TOLERANCES:	
DESCRIPTION:- CC 100X100	ANGULARITY:-±2°	CHECKED BY:-
PARTY DRG NO:-	straightness:-1.70meter	APPROVED BY:-
SECTION NO:- NP-72	TWIST:-1.70mm/meter	SCALE:- 1:1

Global Solutions For Aluminium Extrusions

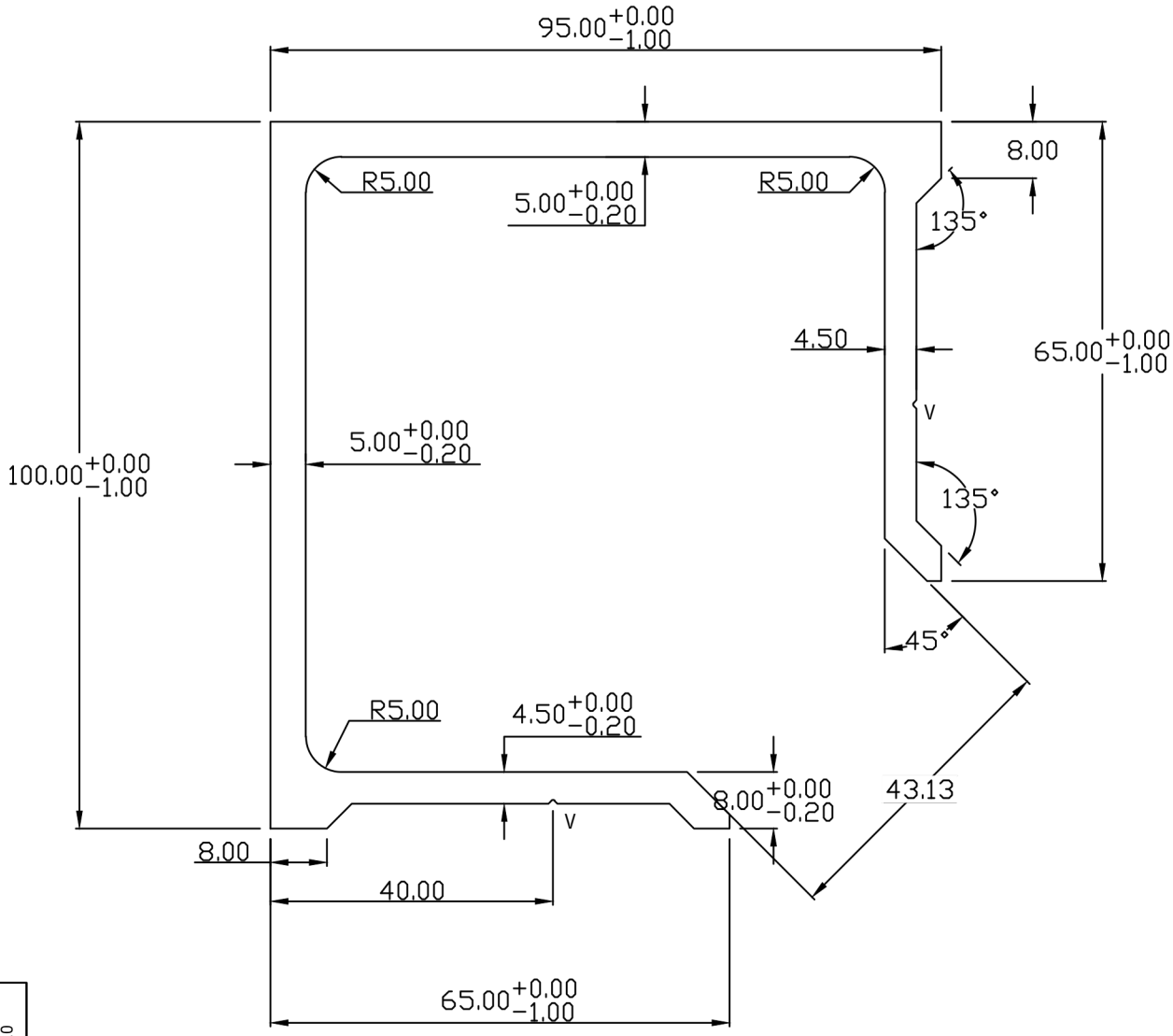

UNSPECIFIED TOLERANCES WILL BE IN ACCORDANCE WITH DIN ISO 2768-1 class C = Coarse

Dimension	0.5 - 33 - 6	±0.3	6 - 30 ±1°	30-120	120-400	400-1000
Longitudional	±0.2		±0.5	±0.8	±1.2	±2.0
Minutes Degrees Radius & Chamfer	0.5 - 33 - 6 ±0.4	±1.0	6 - 30 ±2.0 ±1°	30-120 ±0.8		
	at 10	10-50	50-120 ±0°15'	120-400 ±0°30'	over 400	

NOTE:- UNSPECIFIED RADIOUS ARE 0.3 mm.
NOTE:- ALL DIMENSIONS ARE IN mm.

AREA:- 1549.8544 Sqmm^	ALLOY/TEMPER:- 6061 T6	
EX PERIMETER:- 623.1083 MM	FLATNESS:-±0.8mm^	
WEIGHT:- 4.1846 Kg/Mtr.	TOLERANCES:	
DESCRIPTION:- CC 100X95	ANGULARITY:-±2°	CHECKED BY:-
PARTY DRG NO:-	straightness:-1.70meter	APPROVED BY:-
SECTION NO:- NP-71	TWIST:-1.70mm/meter	SCALE:- 1:1

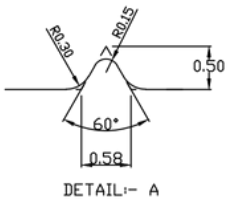

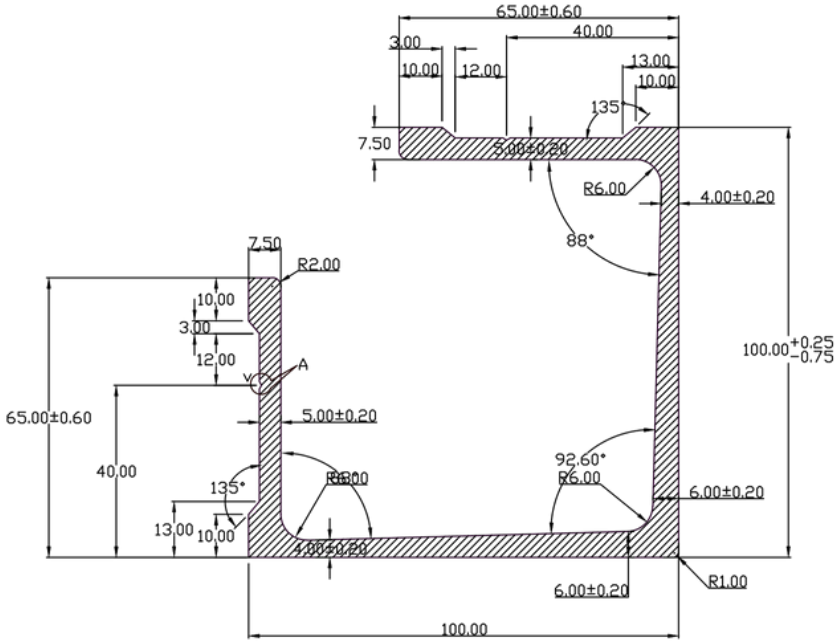

UNSPECIFIED TOLERANCES WILL BE IN ACCORDANCE WITH DIN 16 901 FOR A 1 LINEAR COURSE												
Dimension Longitudional	0.5 - 33 - 6 ±0.2	±0.3	6 - 30 ±0.5	30-90-120 ±0.8	120-400 ±1.2	400-1000 ±2.0						
Angularity	0.5 - 33 - 6 ±1.0 at 10		6 - 30 ±2.0 ±1°	30-120 ±0.8								
Mmm/meter		10-50	50-120	120-400	over 400							

NOTE:- UNSPECIFIED RADIUS:- 0.30 mm.
NOTE:- ALL DIMENSIONS ARE IN mm.

AREA:- 1688.1836 Sqmm^	ALLOY/TEMPER:- 6061 T6	
EX PERIMETER:- 633.9448 MM	FLATNESS:-±0.5mm^	
WEIGHT:- 4.5580 Kg/Mtr.	TOLERANCES:	
DESCRIPTION:- AS PER DRAWING	ANGULARITY:-±1°	(M) No.:-
PARTY DRG NO:- 100 X 100 (1067)	straightness:-1.00meter	APPROVED BY:-
SECTION NO:- NP-273	TWIST:-1.00mm/meter	SCALE:- 1:1

Global Solutions For Aluminium Extrusions

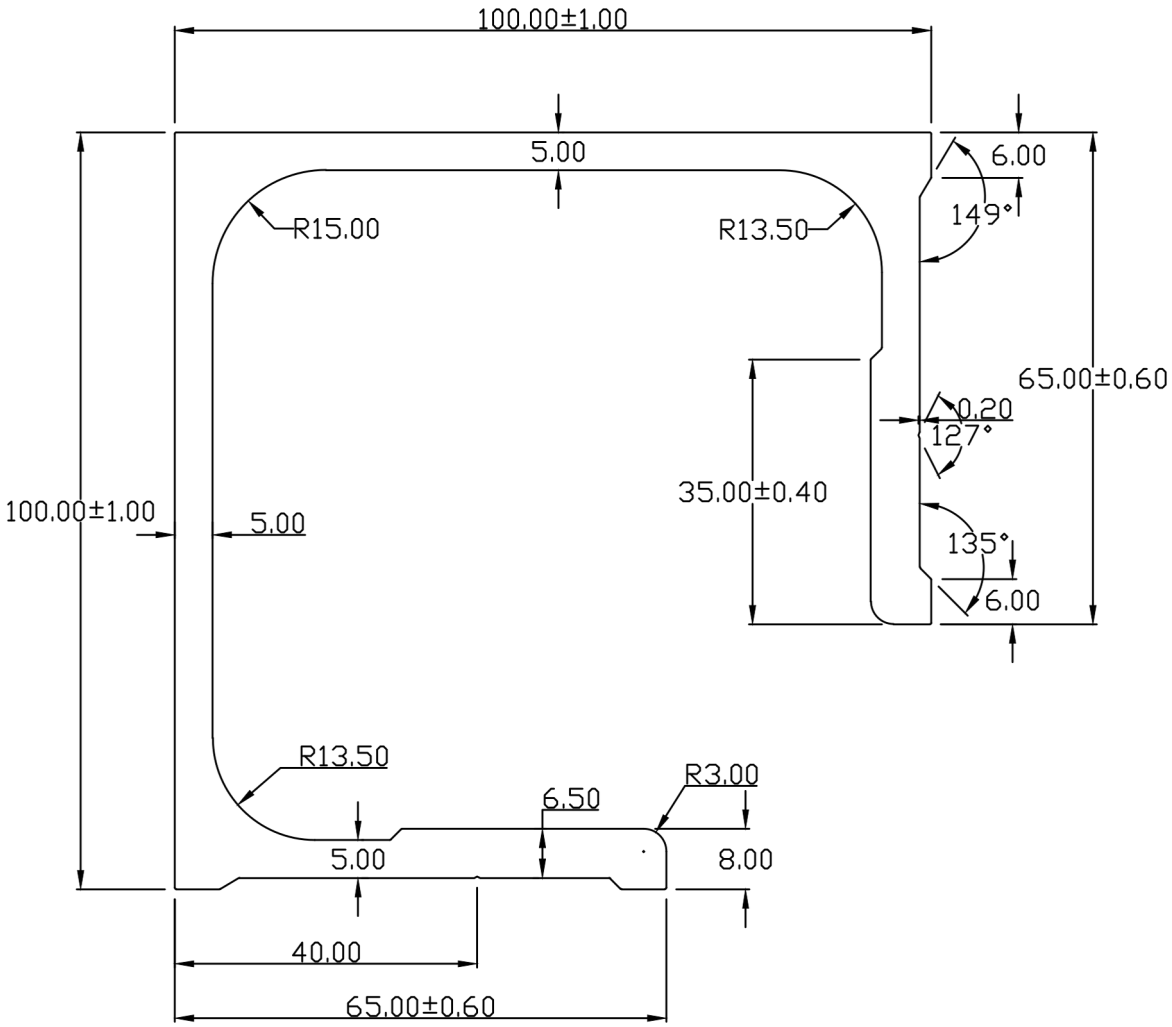

WITH DIN ISO 2768-1 class C = Coarse							
Dimension Longitudional	0.5 - 33 - 6 ±0.2 ±0.4	±0.3	6 - 30 ±0.5	30-120 ±0.8	120-400 ±1.2		
Degree Angle	0.5 - 33 - 6		6 - 30 ±2.0	30-120 ±0.8	±0°15°		
Radius & Chamfer	±1.0 at 10	10-50	50-120120-400over 400				

NOTE:- ALL DIMENSIONS ARE IN mm.

AREA:- 1831.6862 Sqmm^	ALLOY/TEMPER:- 6063 T6	
EX PERIMETER:- 625.3949 MM	FLATNESS:-±0.9mm^	
WEIGHT:- 4.9455 Kg/m	TOLERANCES:	
DESCRIPTION:-	ANGULARITY:-±1.4°	
	straightness:-1.50mm/meter	APPROVED BY:-
SECTION NO:- NP-153	TWIST:-2.50mm/meter	SCALE:- 1:1

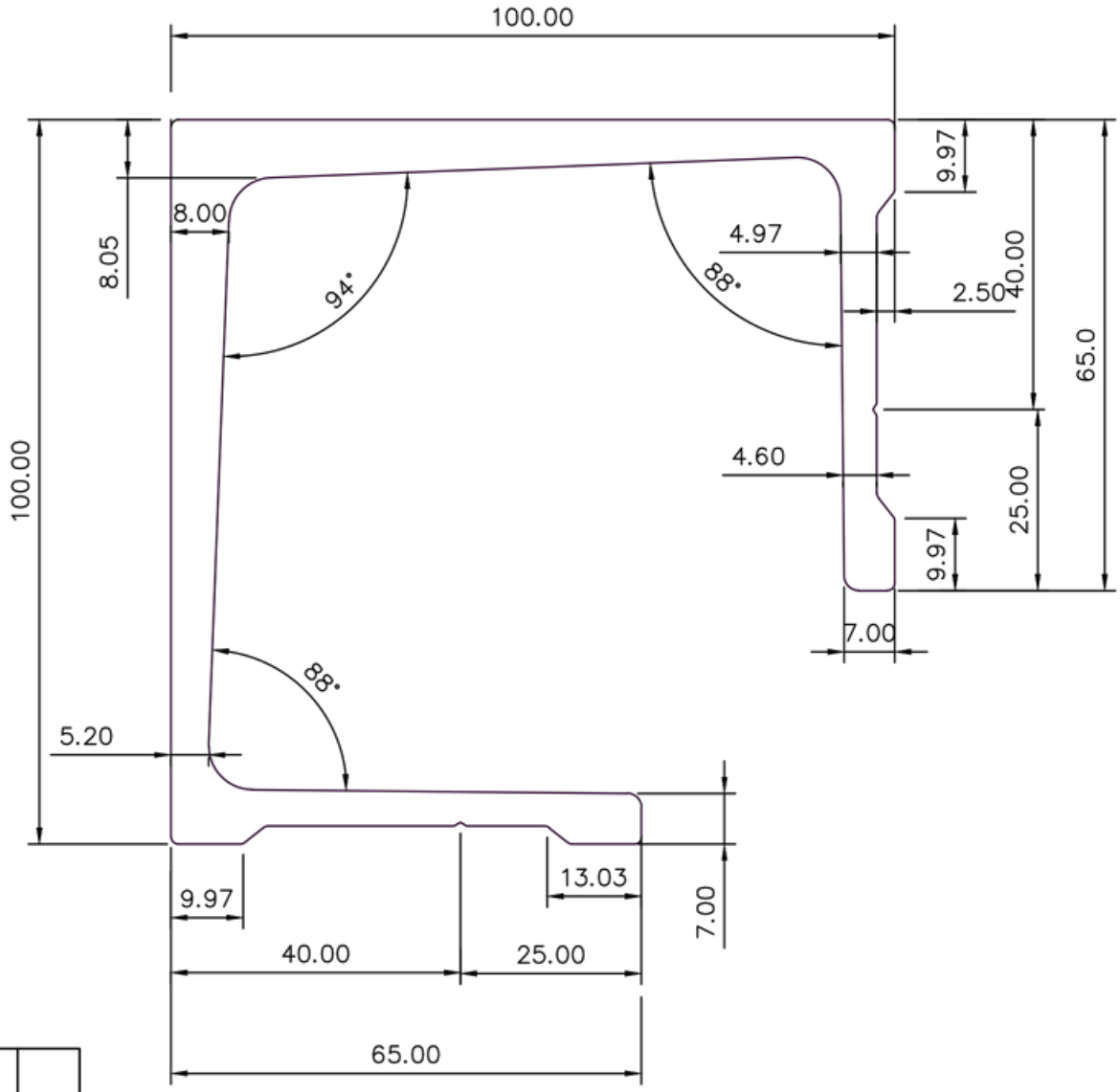

UNSPECIFIED TOLERANCES WILL BE IN ACCORDANCE WITH DIN ISO 2768-1 class C= Coarse

Dimension	0.5 - 33 - 6	6 - 30	30-120	120-400	400-1000
Longitudional	±0.2 ±0.4	±0.5	±0.8	±1.2	±2.0
Degree & angular	0.5 - 33 - 6	6 - 30 ±1°	30-120 ±0.8		
Mm radius & chamfer	±1.0 at 10	10-50	50-120	120-400	over 400

NOTE:- ALL DIMENSIONS ARE IN mm.

AREA:- 1936.2358 Sqmm^	ALLOY/TEMPER:- 6061 T6	
EX PERIMETER:- 624.3831 MM	FLATNESS:-±0.7mm^	
WEIGHT:- 5.227 Kg/Mtr.	TOLERANCES:	
DESCRIPTION:- AS PER DRAWING	ANGULARITY:-±1°	
PARTY DRG NO:- CC 100X100	straightness:-1.00mm/meter	APPROVED BY:-
SECTION NO:- NP-113	TWIST:-1.00mm/meter	SCALE:- 1:1

Global Solutions For Aluminium Extrusions

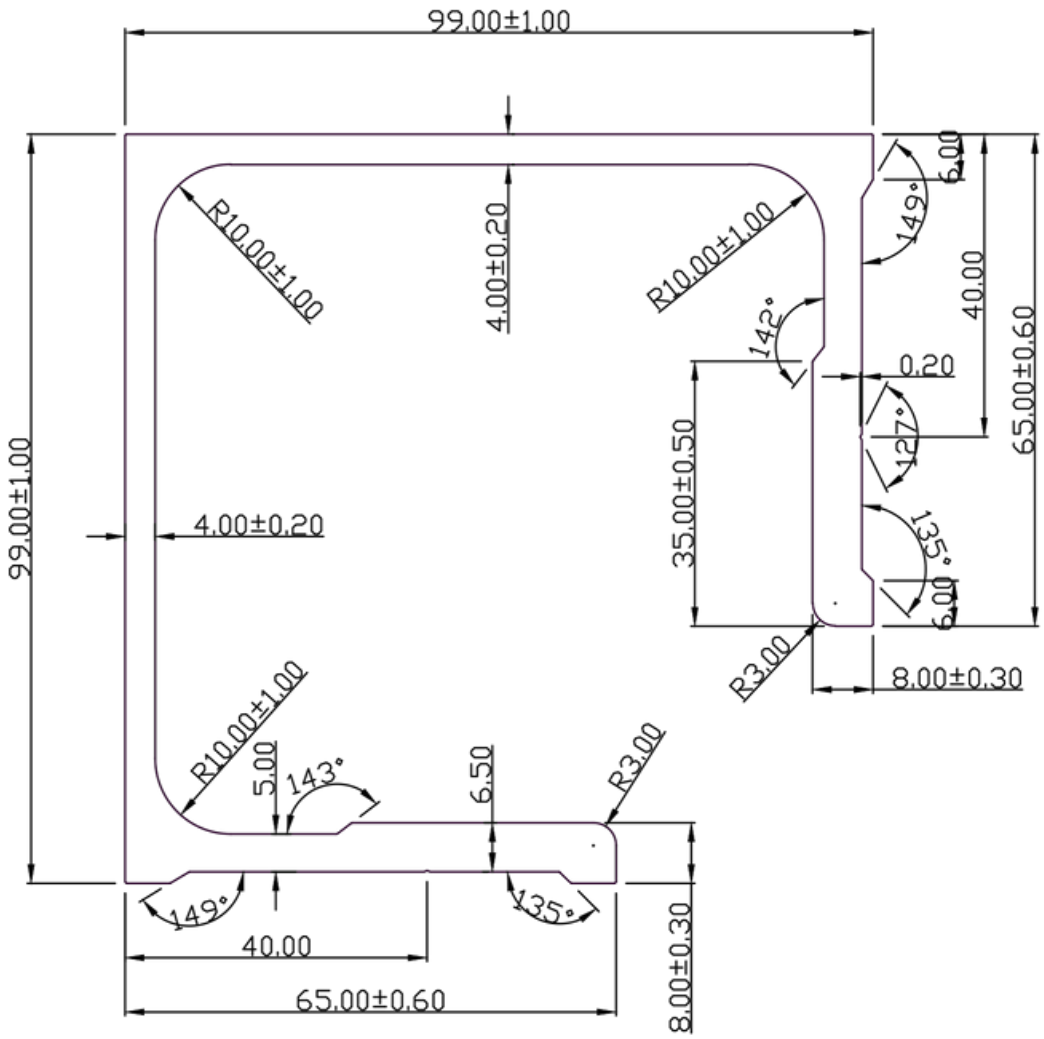

WITH DIN ISO 2768-1 class C = Coarse							
Dimension Longitudional	0.5 - 33 - 6 ±0.2 ±0.4	±0.3	6 - 30 ±0.5	30-120 ±0.8	120-400 ±1.2		
Degree & Chamfer	0.5 - 33 - 6		6 - 30 ±2.0	30-120 ±0.8	±0°15°		
Radius		10-50	50-120120-400over 400				
		±1.0 at 10					

NOTE:- ALL DIMENSIONS ARE IN mm.

AREA:- 1584.1890 Sqmm^	ALLOY/TEMPER:- 6061 T6	
EX PERIMETER:- 630.3384 MM	FLATNESS:-±0.9mm^	
WEIGHT:- 4.2773 Kg/m	TOLERANCES:	
DESCRIPTION:-	ANGULARITY:-±1.4°	(M) No.:-
PARTY DRG. No.:-	straightness:-1.50mm/meter	APPROVED BY:-
SECTION NO:- NP-355	TWIST:-2.50mm/meter	SCALE:- 1:1

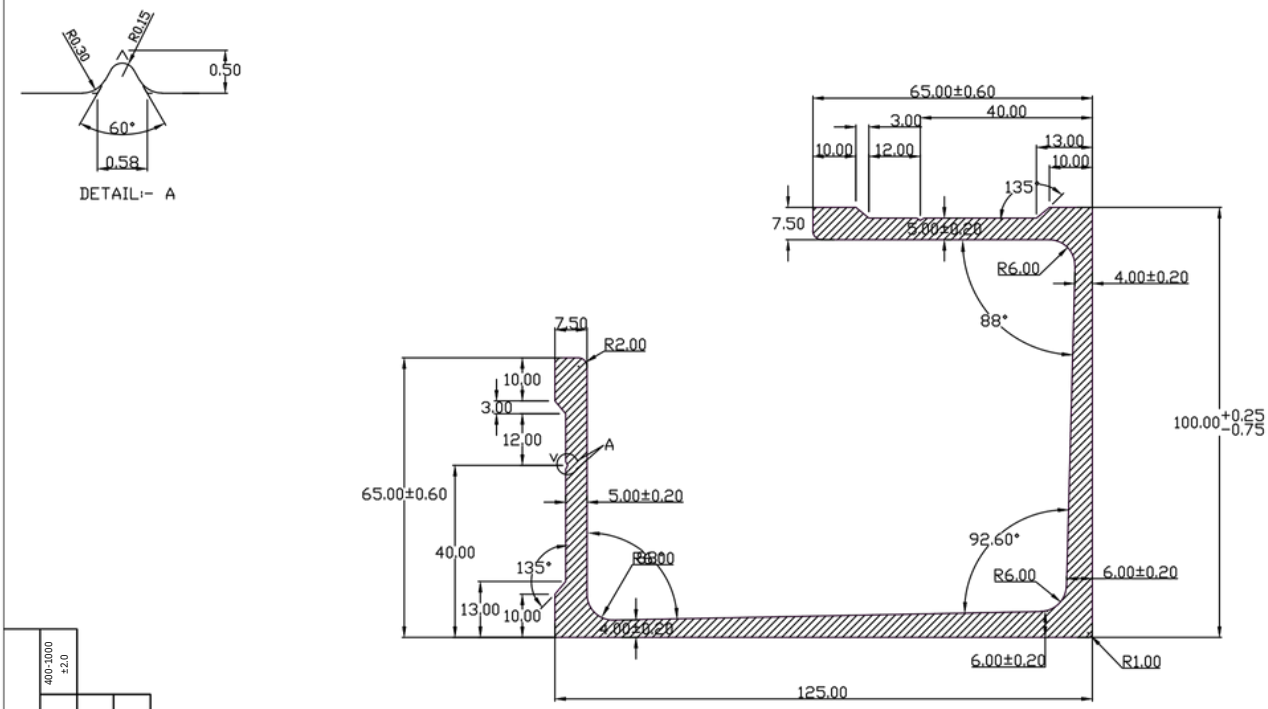

Dimension	6 - 30	30-120	120-400	400-1000
Longitudional	±0.5	±0.8	±1.2	±2.0

Dimension	0.5 - 33 - 6	0.5 - 33 - 6	10-50	50-120	120-400	over 400
Longitudional	±0.2	±0.4	±0.3	±0.8	±1.2	±2.0
Perpendicular to profile	±1.0 at 10			±1°		±2°
Mechanical Properties						±30° ±15°

UNSPECIFIED TOLERANCES WILL BE IN ACCORDANCE WITH DIN 16178 - 1 / DIN 16179 - 1 / DIN 16901 - Cat. - Grade

NOTE:- UNSPECIFIED RADIUS:- 0.30 mm.
NOTE:- ALL DIMENSIONS ARE IN mm.

AREA:- 1813.1723 Sqmm^	ALLOY/TEMPER:- 6061 T6	
EX PERIMETER:- 683.9379 MM	FLATNESS:-±0.5mm^	
WEIGHT:- 4.8955 Kg/Mtr.	TOLERANCES:	
DESCRIPTION:- AS PER DRAWING	ANGULARITY:-±1°	(M) No.:-
PARTY DRG NO:- 125 X 100 (1072)	straightness:-1.00meter	APPROVED BY:-
SECTION NO:- NP-274	TWIST:-1.00mm/meter	SCALE:- 1:1

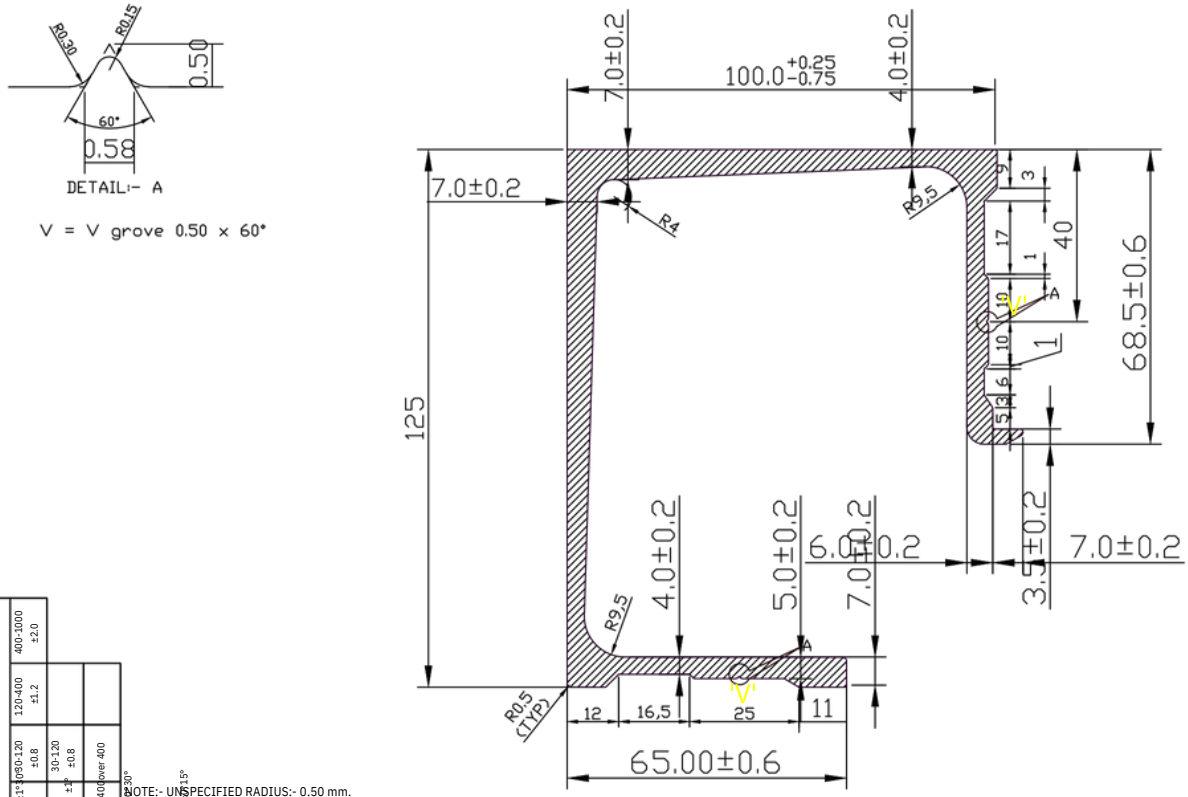

NOTE:- UNSPECIFIED RADIUS:- 0.50 mm.
NOTE:- ALL DIMENSIONS ARE IN mm.

UNSPECIFIED TOLERANCES WILL BE IN ACCORDANCE WITH DIN 16901 FOR CLASS C COARSE

Dimension	6 - 30	30-120	120-400	400-1000
Longitudional	±0.5	±0.8	±1.2	±2.0

	0.5 - 33 - 6	6 - 33	10-50	50-120	120-400	over 400
Longitudional	±0.2	±2.0	±0.3	±0.8	±1.2	
Dimension	±0.4	±2°		±0.8		
Straightness	0.5 - 33 - 6	6 - 30	10-50	50-120	120-400	over 400
Angularity	±1.0	±30'	±15'			
Twist	at 10					

AREA:- 1874.4171 Sqmm^	ALLOY/TEMPER:- 6061 T6	
EX PERIMETER:- 698.4633 MM	FLATNESS:-±0.5mm^	
WEIGHT:- 5.0609 Kg/Mtr.	TOLERANCES:	
DESCRIPTION:- AS PER DRAWING	ANGULARITY:-±1°	(M) No.:-
PARTY DRG NO:- 125 X 100 (1100)	straightness:-1.00meter	APPROVED BY:-
SECTION NO:- NP-272	TWIST:-1.00mm/meter	SCALE:- 1:1

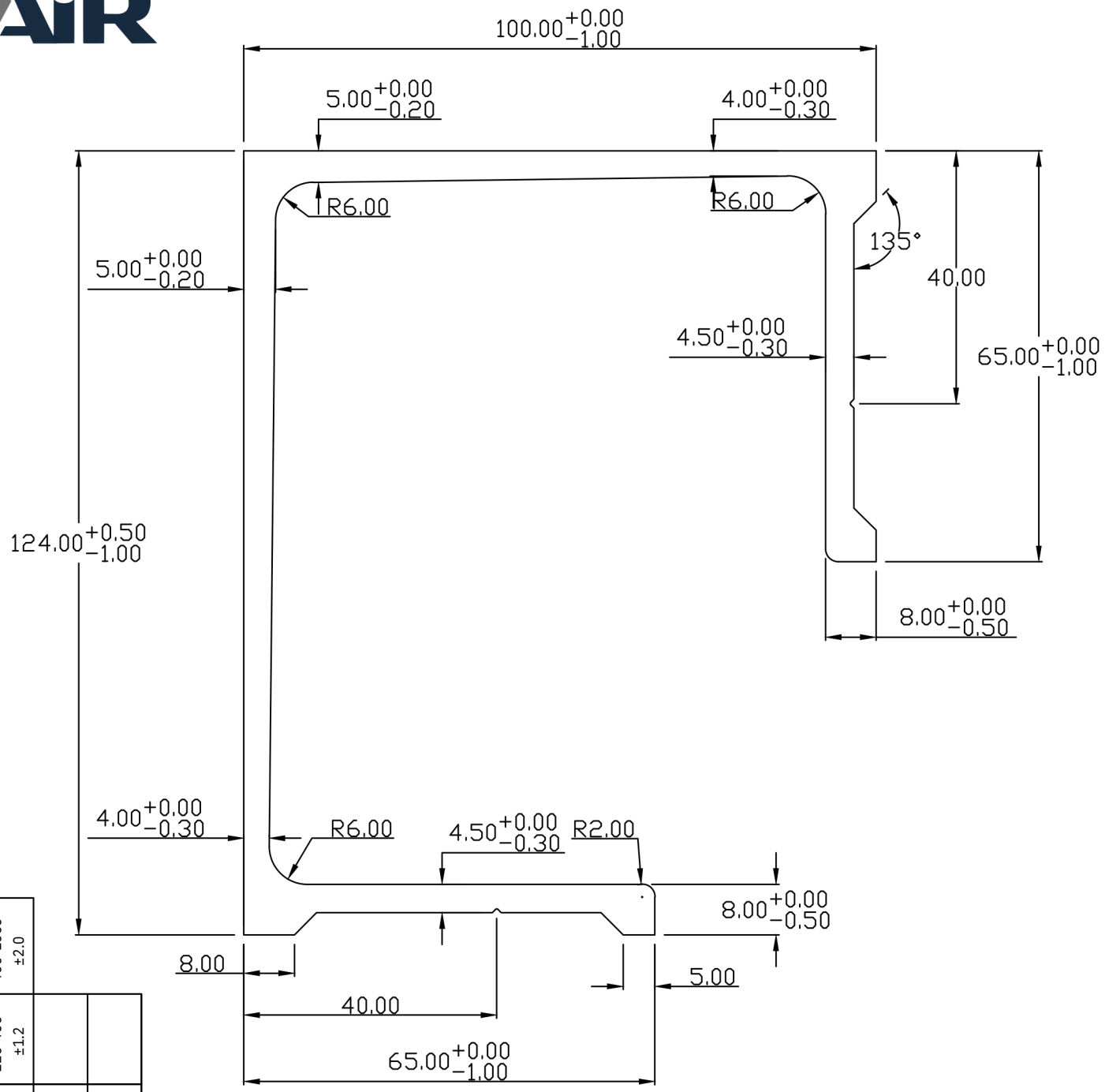

UNSPECIFIED TOLERANCES WILL BE IN ACCORDANCE WITH DIN ISO 2768-1 class C= Coarse								
Dimension Longitudional	0.5 - 33 - 6 ±0.2	±0.3	6 - 30 ±1°30' ±0.5	30-120 ±0.8	120-400 ±1.2	400-1000 ±2.0		
Degree & Minutes	0.5 - 33 - 6 ±0.4	±1.0	6 - 30 ±2.0 ±1°	30-120 ±0.8				
Radius & Chamfer	at 10	10-50	50-120	120-400	over 400			

NOTE:- UNSPECIFIED RADIOUS ARE 0.3 mm.
NOTE:- ALL DIMENSIONS ARE IN mm.

AREA:- 1636.9267 Sqmm^	ALLOY/TEMPER:- 6061 T6	
EX PERIMETER:- 687.3193 MM	FLATNESS:-±0.8mm^	
WEIGHT:- 4.420 Kg/Mtr.	TOLERANCES:	
DESCRIPTION:- IC W/O LIP	ANGULARITY:-±2°	CHECKED BY:-
PARTY DRG NO:-	straightness:-1.70meter	APPROVED BY:-
SECTION NO:- NP-53	TWIST:-1.70mm/meter	SCALE:- 1:1

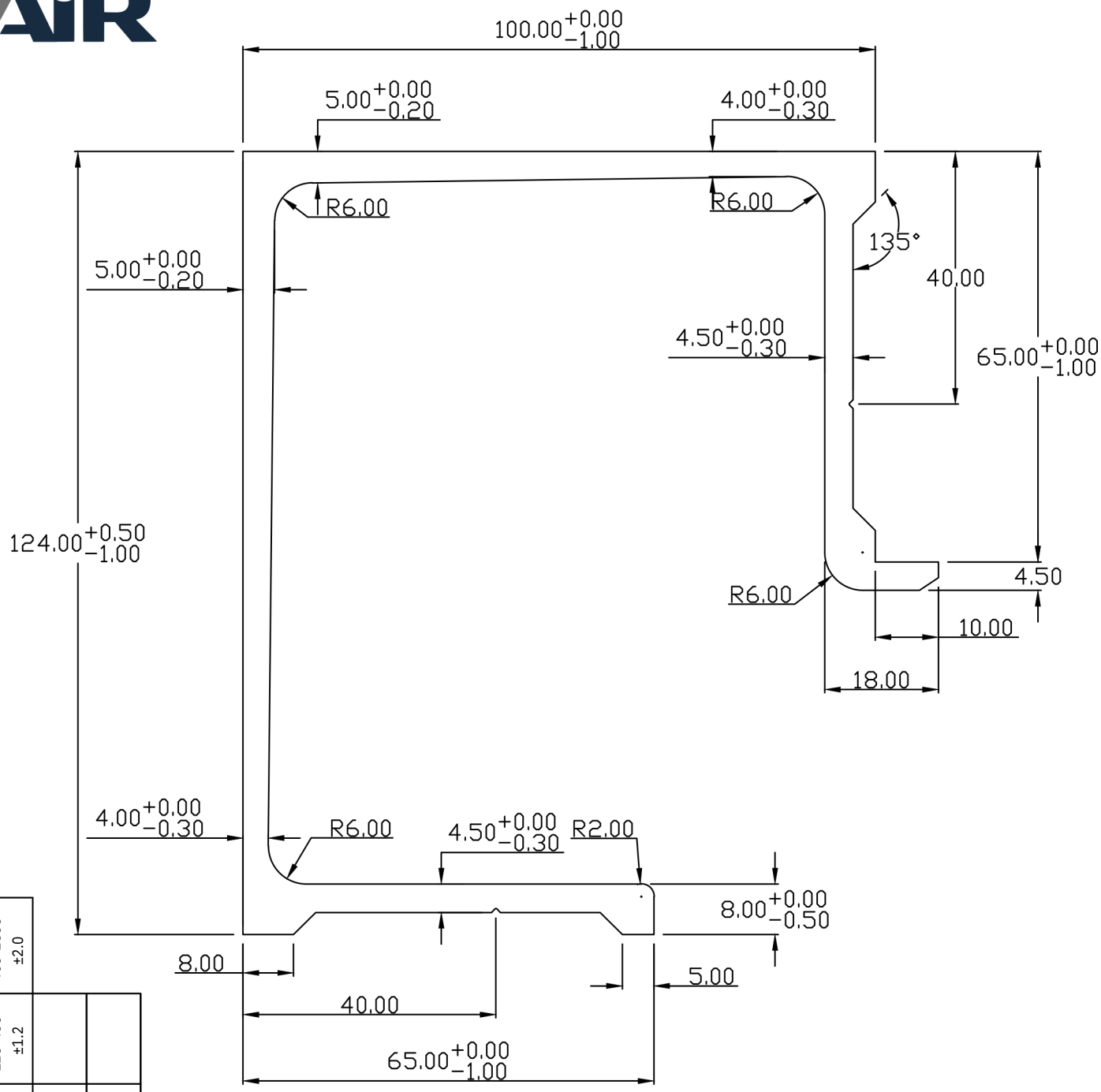

UNSPECIFIED TOLERANCES WILL BE IN ACCORDANCE WITH DIN ISO 2768-1 class C = Coarse								
Dimension Longitudional	0.5 - 33 - 6 ±0.2	±0.3	6 - 30 ±1° ±0.5	30-120 ±0.8	120-400 ±1.2	400-1000 ±2.0		
Dimension Radius & Chamfer	0.5 - 33 - 6 ±0.4	±1.0	6 - 30 ±1° ±2.0	30-120 ±0.8				
Angular	at 10	10-50 ±30°	50-120 ±15°	120-400	over 400			

NOTE:- UNSPECIFIED RADIOUS ARE 0.3 mm.
NOTE:- ALL DIMENSIONS ARE IN mm.

AREA:- 1708.0595 Sqmm^	ALLOY/TEMPER:- 6061 T6	
EX PERIMETER:- 713.2080 MM	FLATNESS:-±0.8mm^	
WEIGHT:- 4.612 Kg/Mtr.	TOLERANCES:	
DESCRIPTION:- IC WITH LIP	ANGULARITY:-±2°	CHECKED BY:-
PARTY DRG NO:-	straightness:-1.70meter	APPROVED BY:-
SECTION NO:- NP-54	TWIST:-1.70mm/meter	SCALE:- 1:1

Global Solutions For Aluminium Extrusions

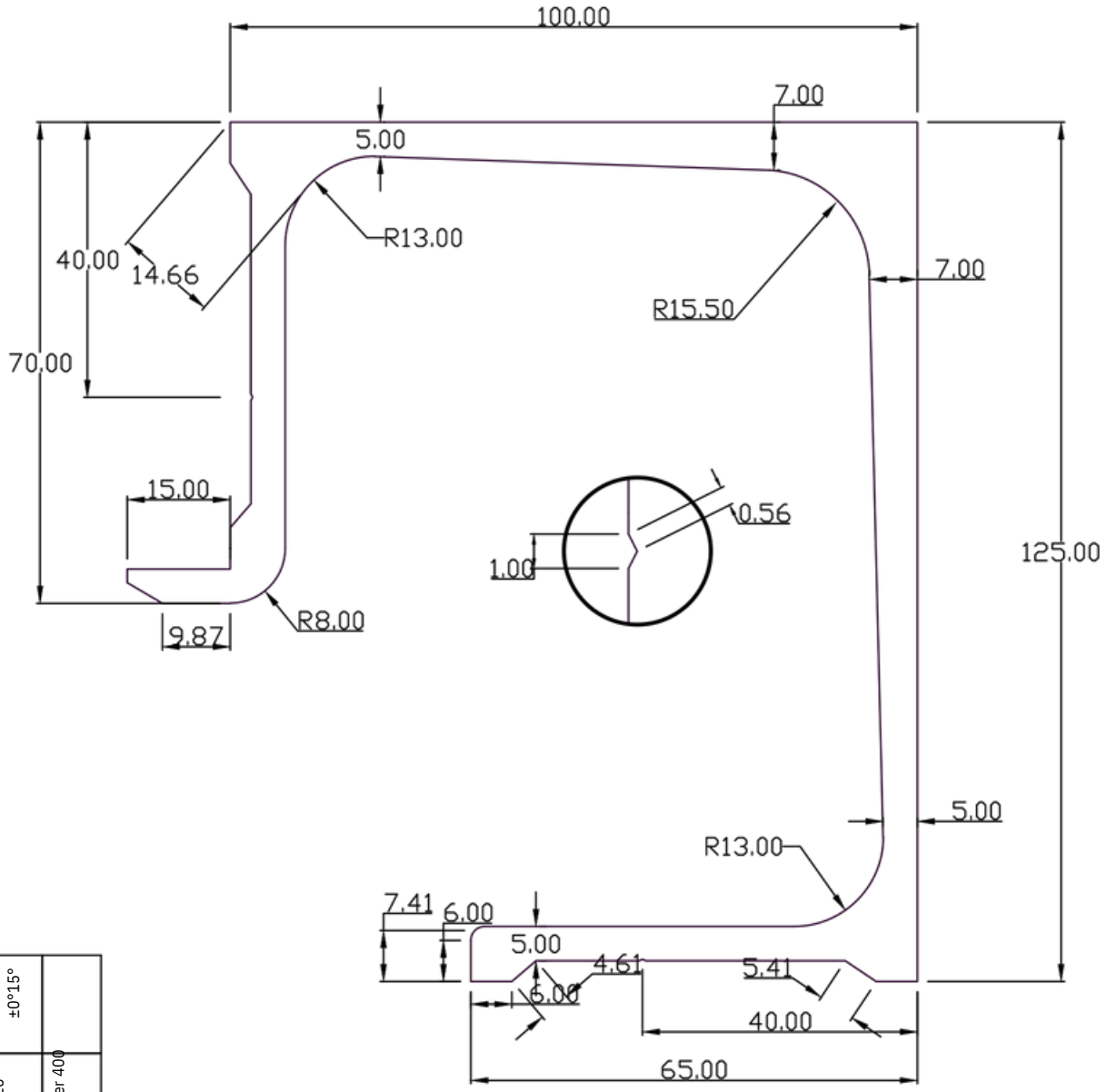

WITH DIN ISO 2768-1 class C = Coarse						
Dimension Longitudional	0.5 - 33 - 6 ±0.2 ±0.4	±0.3	6 - 30 ±0.5	30-120 ±0.8	120-400 ±1.2	
Degree & Chamfer	0.5 - 33 - 6		6 - 30 ±2.0	30-120 ±0.8	±0°15°	
Radius	±1.0 at 10	10-50	50-120120-400over 400			

NOTE:- ALL DIMENSIONS ARE IN mm.

AREA:- 2186.1673 Sqmm^	ALLOY/TEMPER:- 6063 T6	
EX PERIMETER:- 706.0478 MM	FLATNESS:-±0.9mm^	
WEIGHT:- 5.9026 Kg/m	TOLERANCES:	PARTY NAME:-
DESCRIPTION:-	ANGULARITY:-±1.4°	(M) No.:-
PARTY DRG. No.:- SLX-100	straightness:-1.50mm/meter	APPROVED BY:-
SECTION NO:- NP-188	TWIST:-2.50mm/meter	SCALE:- 1:1

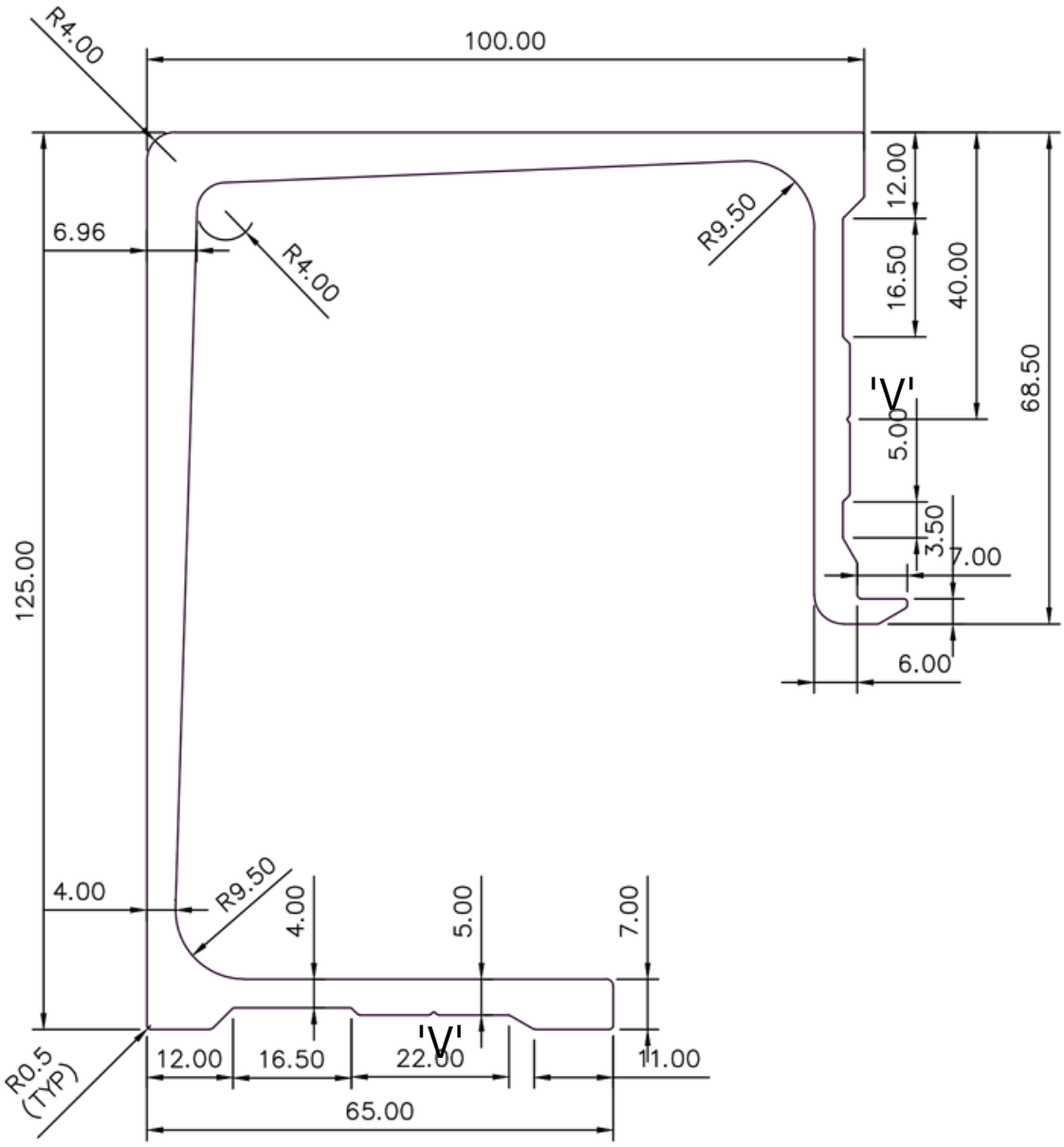

UNSPECIFIED TOLERANCES WILL BE IN ACCORDANCE WITH DIN ISO 2768-1 class C - coarse								
Dimension Longitudional	0.5 - 33 - 6 ±0.2 ±0.4	±0.3	6 - 30 ±1° ±0.5	30-120 ±0.8	120-400 ±1.2	400-1000 ±2.0		
Minutes & Degrees & Diameter	0.5 - 33 - 6 ±2.0		6 - 30 ±1° ±2.0	30-120 ±1° ±0.8				
	±1.0 at 10	10-505	0-120	120-400	over 400			

NOTE:- ALL DIMENSIONS ARE IN mm.

AREA:- 1872.7901 Sqmm^	ALLOY/TEMPER:- 6061 T6	
EX PERIMETER:- 696.7201 MM	FLATNESS:-±0.7mm^	
WEIGHT:- 5.056 Kg/Mtr.	TOLERANCES:	
DESCRIPTION:- AS PER DRAWING	ANGULARITY:-±1°	
PARTY DRG NO:- CC 125X100 W/LIP	straightness:-1.50meter	APPROVED BY:-
SECTION NO:- NP-117	TWIST:-1.50mm/meter	SCALE:- 1:1

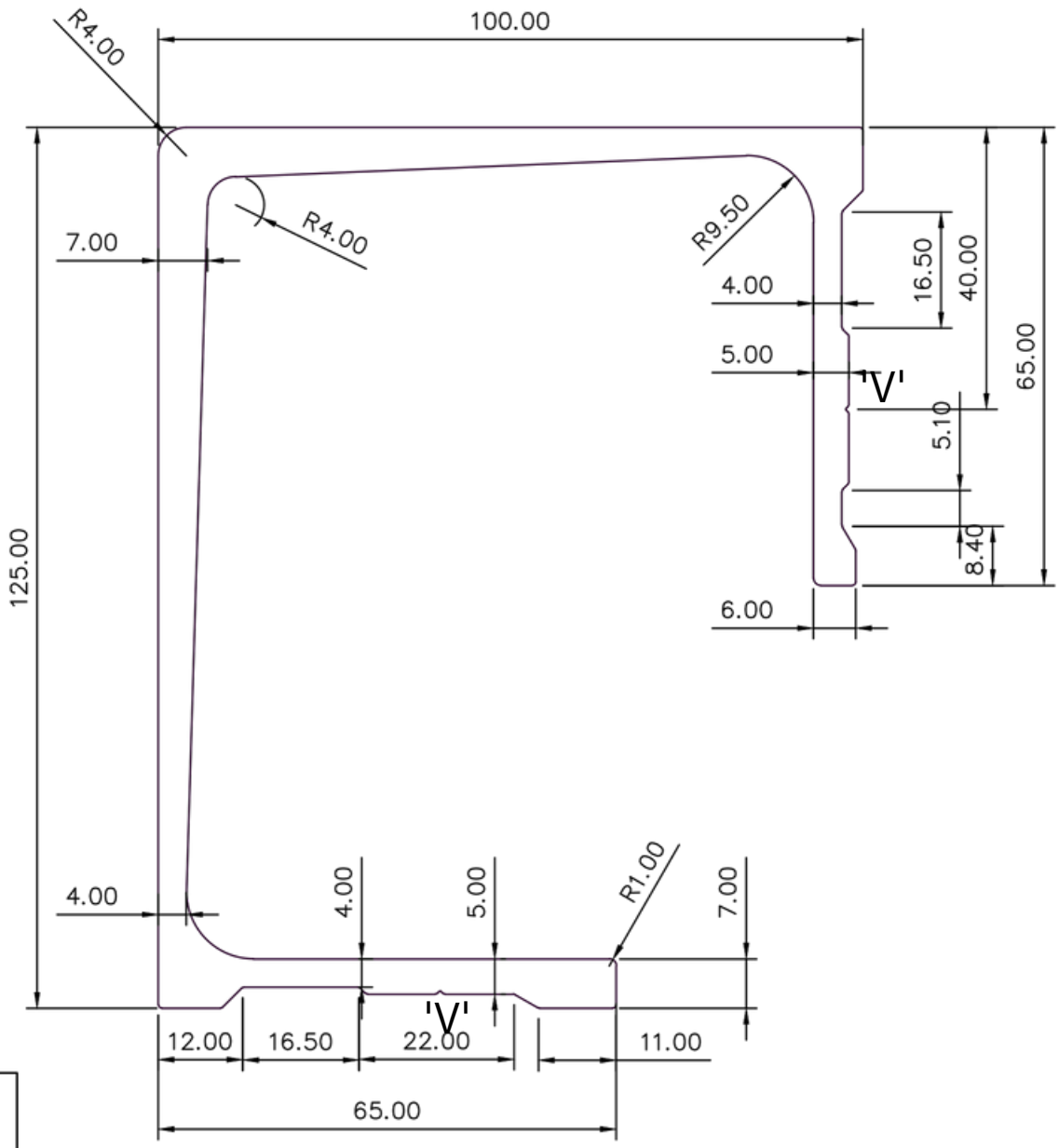

Dimension Longitudional	0.5 - 33 - 6		6 - 30	30-120	120-400	400-1000
	±0.2 ±0.4	±0.3	±0.5 ±1°	±0.8 ±0.8	±1.2	±2.0
Angular	0.5 - 33 - 6		6 - 30	30-120		
			±2.0			
Radius & Chamfer	±1.0 at 10	10-50	50-120	120-400	over 400	

UNSPECIFIED TOLERANCES WILL BE IN ACCORDANCE WITH DIN ISO 2768-1 class C = Coarse

±0°30'

±0°15'

NOTE:- ALL DIMENSIONS ARE IN mm.

AREA:- 1834.6993 Sqmm^	ALLOY/TEMPER:- 6061 T6	
EX PERIMETER:- 678.9128 MM	FLATNESS:-±0.7mm^	
WEIGHT:- 4.953 Kg/Mtr.	TOLERANCES:	
DESCRIPTION:- AS PER DRAWING	ANGULARITY:-±1°	
PARTY DRG NO:- CC 125X100	straightness:-1.50meter	APPROVED BY:-
SECTION NO:- NP-116	TWIST:-1.50mm/meter	SCALE:- 1:1

Global Solutions For Aluminium Extrusions

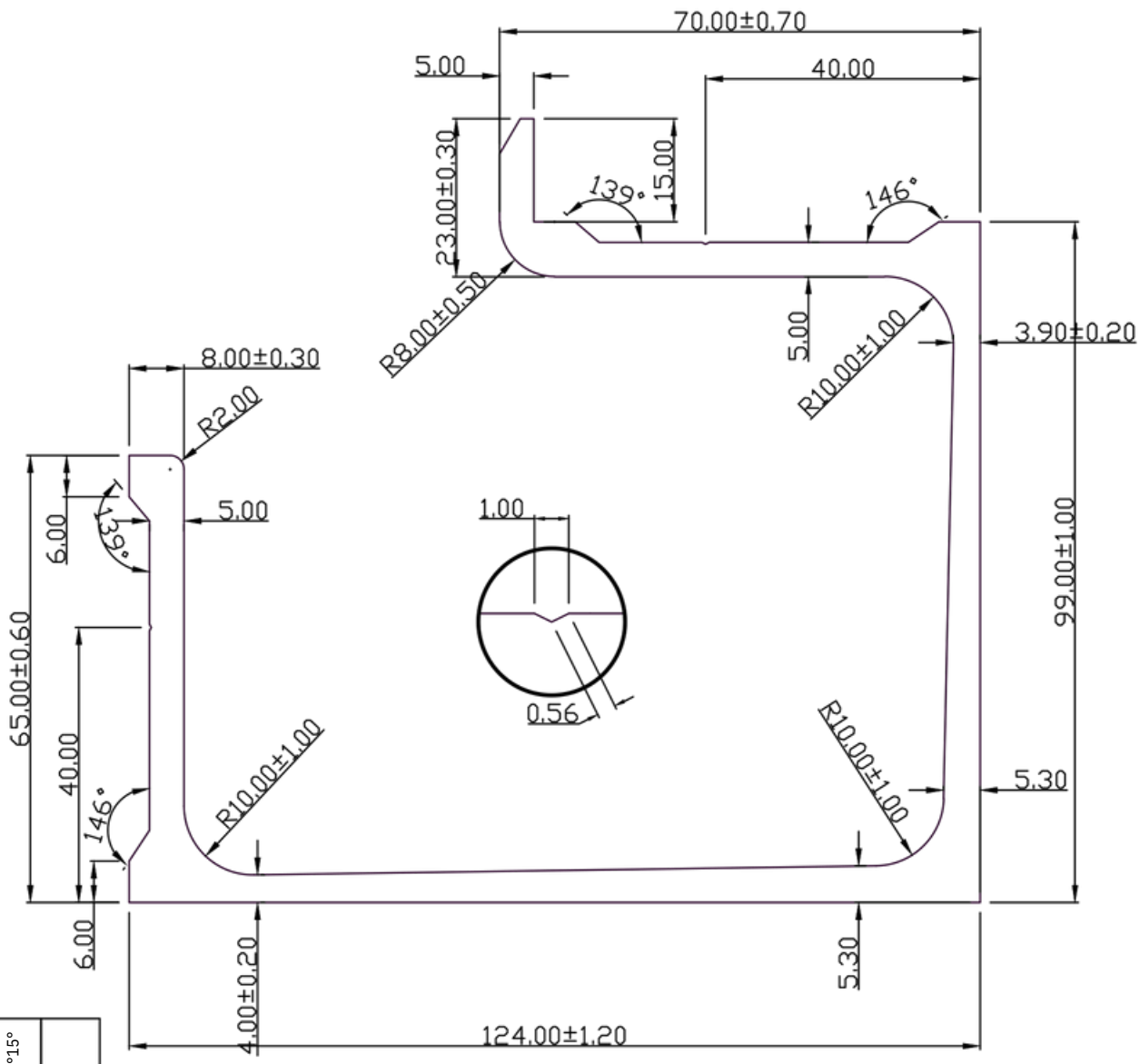

WITH DIN ISO 2768-1 class C = Coarse							
Dimension Longitudional	0.5 - 33 - 6 ±0.2 ±0.4	±0.3	6 - 30 ±0.5	30-120 ±0.8	120-400 ±1.2		
Degree Angular	0.5 - 33 - 6		6 - 30 ±2.0	30-120 ±0.8	±0°15°		
Radius & Chamfer	±1.0 at 10	10-50	50-120	120-400	over 400		

NOTE:- ALL DIMENSIONS ARE IN mm.

AREA:- 1839.0665 Sqmm^	ALLOY/TEMPER:- 6061 T6	
EX PERIMETER:- 712.4490 MM	FLATNESS:-±0.9mm^	
WEIGHT:- 4.9627 Kg/Mt.	TOLERANCES:	PARTY NAME:-
DESCRIPTION:-	ANGULARITY:-±1.4°	(M) No.:-
PARTY DRG. No.:-	straightness:-1.50mm/meter	APPROVED BY:-
SECTION NO:- NP-354	TWIST:-2.50mm/meter	SCALE:- 1:1

Global Solutions For Aluminium Extrusions

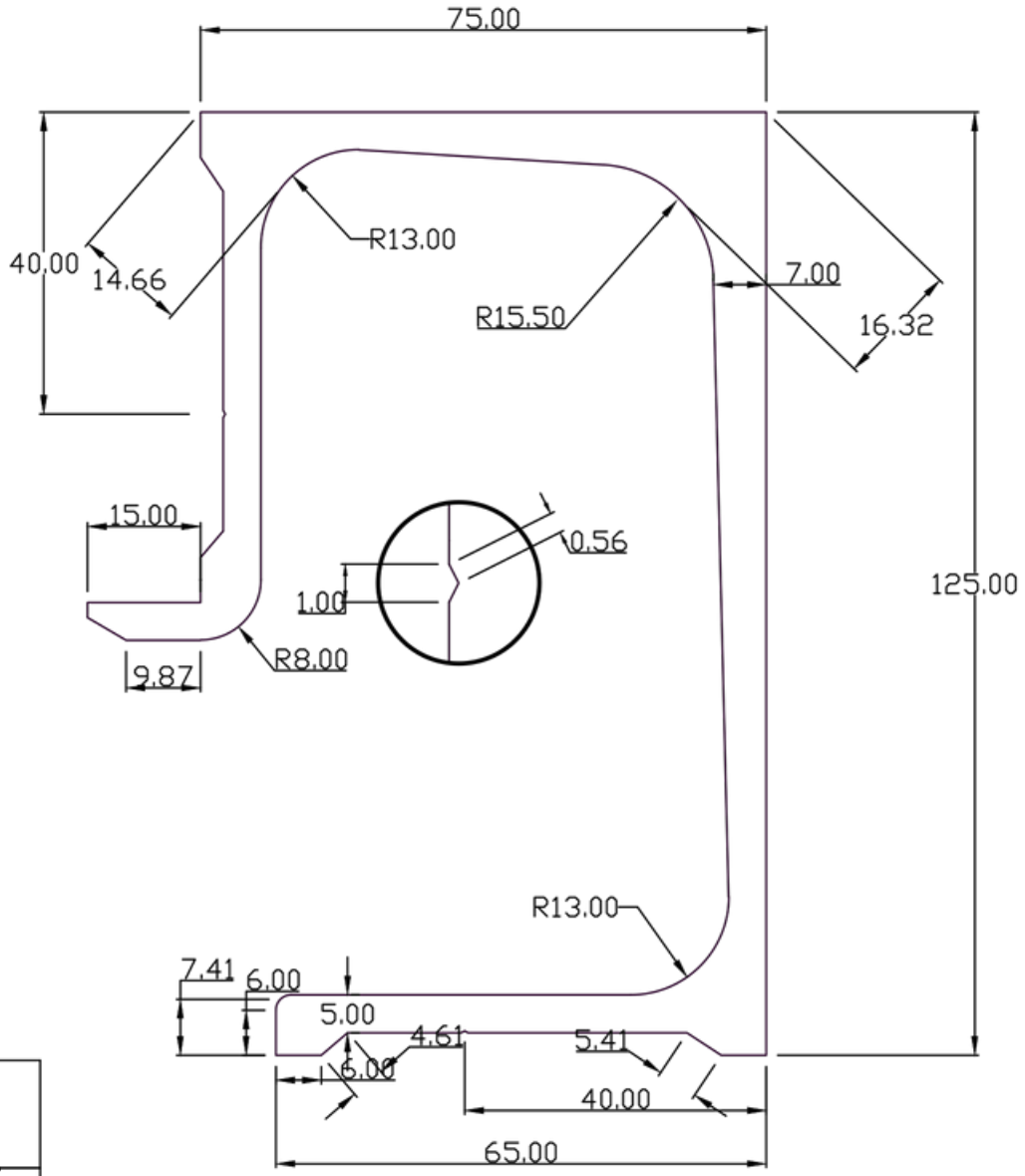

WITH DIN ISO 2768-1 class C = Coarse						
Dimension	0.5 - 33 - 6	6 - 30	30-120	120-400		
Longitudional	±0.2 ±0.4	±0.3	±0.8	±1.2		
Degree	0.5 - 33 - 6	6 - 30	30-120	±0°15°		
Radius & Chamfer	±1.0 at 10	10-50	50-120120-400over 400			

NOTE:- ALL DIMENSIONS ARE IN mm.

AREA:- 2036.1559 Sqmm^	ALLOY/TEMPER:- 6063 T6	
EX PERIMETER:- 671.0746 MM	FLATNESS:-±0.9mm^	
WEIGHT:- 5.4976 Kg/m	TOLERANCES:	PARTY NAME:-
DESCRIPTION:-	ANGULARITY:-±1.4°	(M) No.:-
PARTY DRG. No.:- SLX	straightness:-1.50mm/meter	APPROVED BY:-
SECTION NO:- NP-189	TWIST:-2.50mm/meter	SCALE:- 1:1

Global Solutions For Aluminium Extrusions

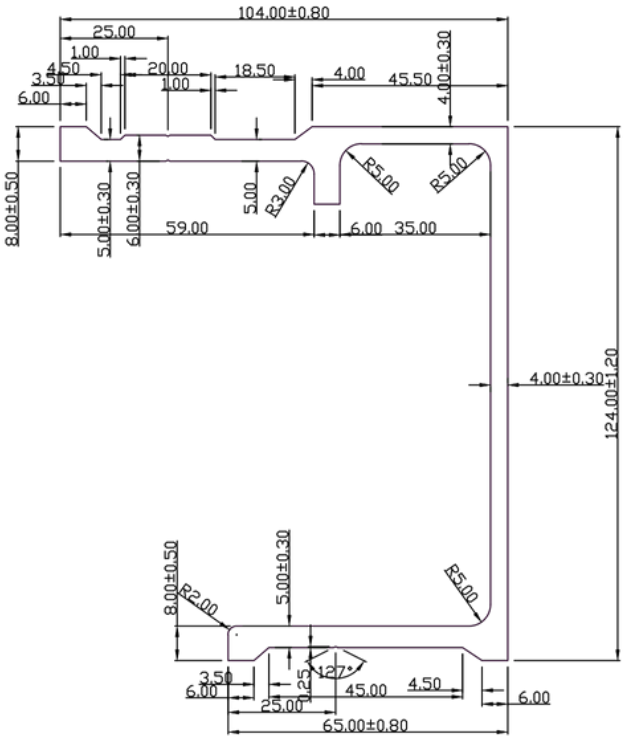

NOTE:- UNSPECIFIED RADIUS:- 0.30 mm.
NOTE:- ALL DIMENSIONS ARE IN mm.

UNSPECIFIED TOLERANCES WILL BE IN ACCORDANCE WITH DIN ISO 2768-1 CLASS C-G CONFORM

Dimension	0.5 - 33 - 6	±0.3	6 - 30	±0.5	30-120	±0.8	120-400	±1.2	400-1000	±2.0
Longitudional	0.5 - 33 - 6	±1.0	6 - 30	±2.0	30-120	±0.8				
Mm/Degree	at 10		10-50	±1°	50-120	±1°	120-400	over 400		

±30°
±15°

AREA:- 1448.5431 Sqmm^	ALLOY/TEMPER:- 6061 T6	
EX PERIMETER:- 602.7263 MM	FLATNESS:-±0.7mm^	
WEIGHT:- 3.9110 Kg/Mtr.	TOLERANCES:	
DESCRIPTION:- AS PER DRAWING	ANGULARITY:-±1°	(M) No.:-
PARTY DRG NO:-	straightness:-1.50meter	APPROVED BY:-
SECTION NO:- NP-344	TWIST:-1.50mm/meter	SCALE:- 1:1

Global Solutions For Aluminium Extrusions

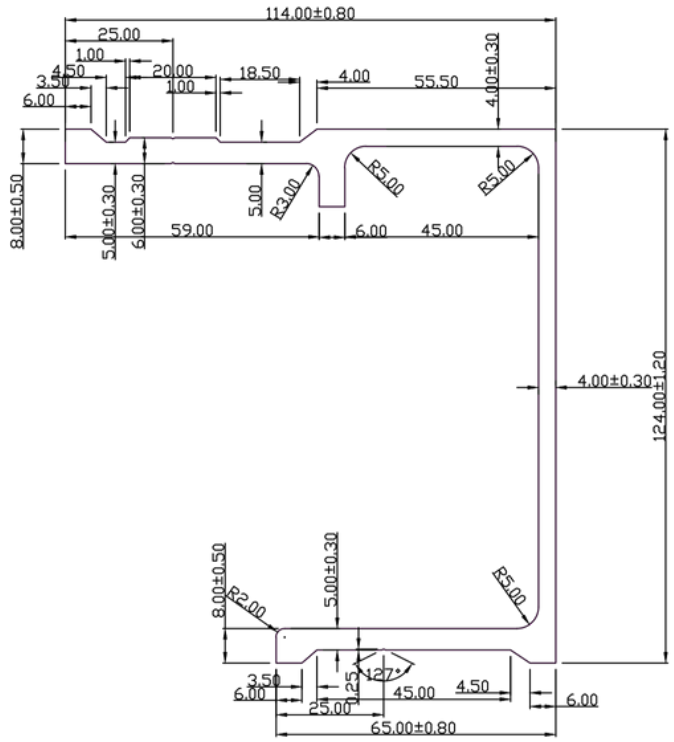

NOTE:- UNSPECIFIED RADIUS:- 0.30 mm.
NOTE:- ALL DIMENSIONS ARE IN mm.

UNSPECIFIED TOLERANCES WILL BE IN ACCORDANCE WITH DIN ISO 2768-1 CLASS C-G CONFORM

Dimension	0.5 - 3	3 - 6	6 - 30	30-120	120-400	400-1000
Longitudional	±0.2	±0.3	±0.5	±0.8	±1.2	±2.0
Angular	0.5 - 3	3 - 6	6 - 30	30-120		
	±0.4	±1.0	±2.0	±0.8		
Radius	at 10	10-50	50-120	120-400	over 400	

±30'
±15'

AREA:- 1488.5431 Sqmm^	ALLOY/TEMPER:- 6061 T6	
EX PERIMETER:- 622.7263 MM	FLATNESS:-±0.7mm^	
WEIGHT:- 4.0190 Kg/Mtr.	TOLERANCES:	
DESCRIPTION:- AS PER DRAWING	ANGULARITY:-±1°	(M) No.:-
PARTY DRG NO:-	straightness:-1.50meter	APPROVED BY:-
SECTION NO:- NP-343	TWIST:-1.50mm/meter	SCALE:- 1:1

Global Solutions For Aluminium Extrusions

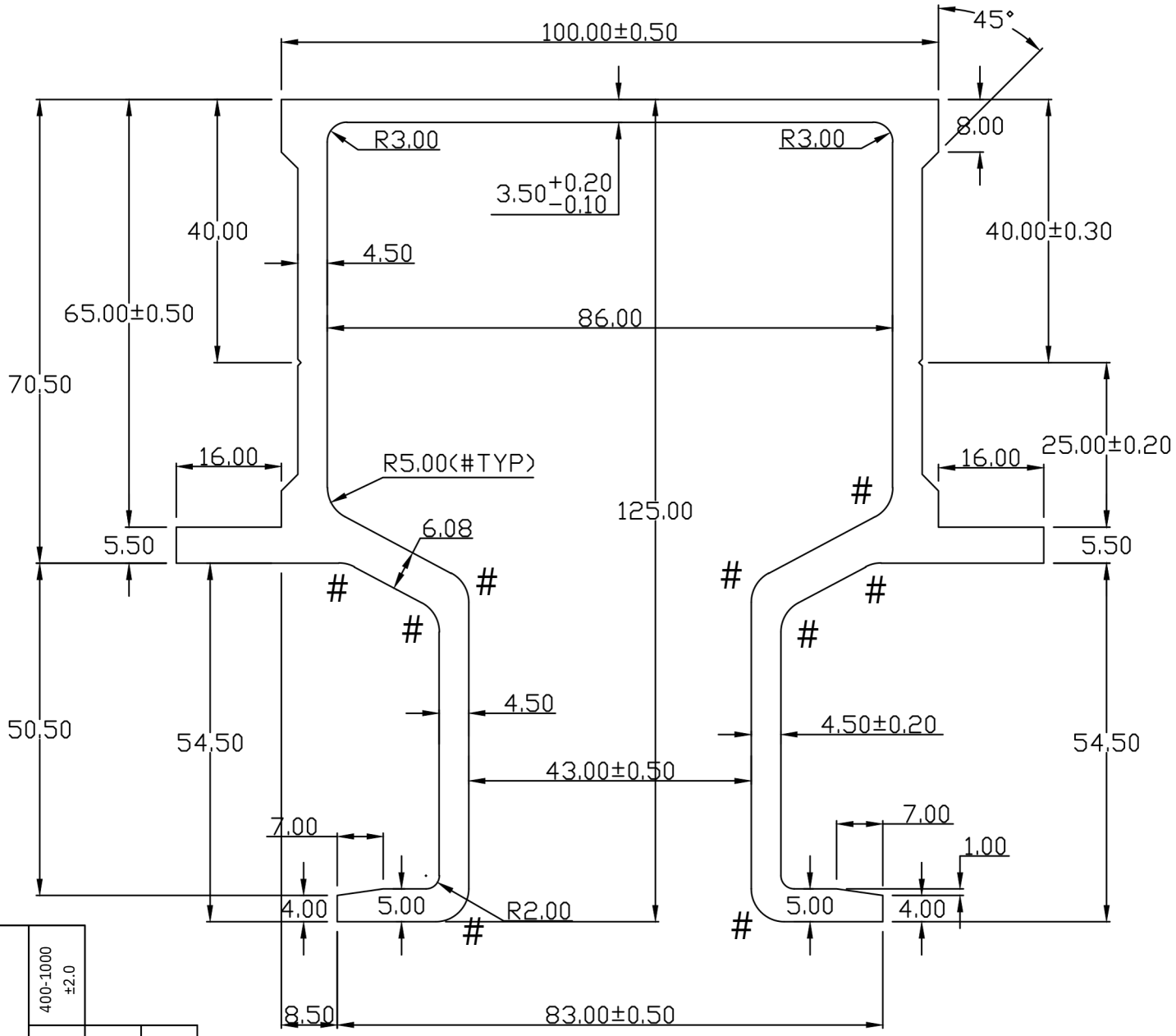

Dimension Longitudional	0.5 - 33 - 6 ±0.2	6 - 30 ±0.5	30-120 ±0.8	120-400 ±1.2	400-1000 ±2.0
Degrees & Minutes	0.5 - 33 - 6 ±0.4	6 - 30 ±2.0	30-120 ±0.8		
Radius & Chamfer	±1.0 at 10	±1°	over 400		
	±0.3	10-50	50-120	120-400	

UNSPECIFIED TOLERANCES WILL BE IN ACCORDANCE WITH DIN ISO 2768-1 class C = Coarse

NOTE:- UNSPECIFIED RADIOUS ARE 0.3 mm.
NOTE:- ALL DIMENSIONS ARE IN mm.

AREA:- 2078.2111 Sqmm^	ALLOY/TEMPER:- 6061 T6	
EX PERIMETER:- 867.5016 MM	FLATNESS:-±0.8mm^	
WEIGHT:- 5.611 Kg/Mtr.	TOLERANCES:	
DESCRIPTION:- SOLDIER WITH LIP	ANGULARITY:-±2°	CHECKED BY:-
PARTY DRG NO:-	straightness:-1.70meter	APPROVED BY:-
SECTION NO:- NP-48	TWIST:-1.70mm/meter	SCALE:- 1:1

Global Solutions For Aluminium Extrusions

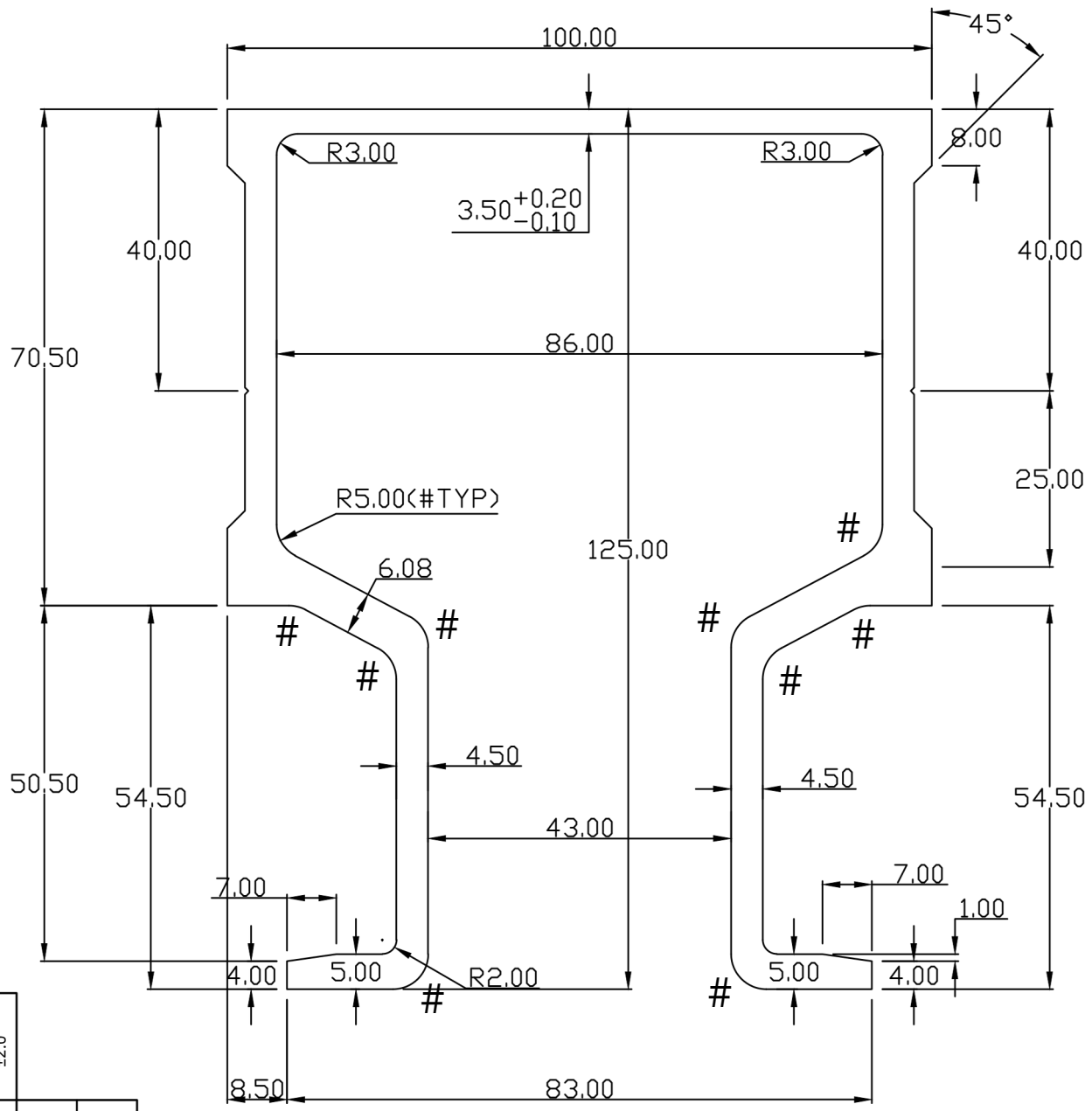

Dimension Longitudiional	0.5 - 33 - 6 ±0.2 ±0.4	±0.3	6 - 30 ±1° ±0.5	30-120 ±0.8	120-400 ±1.2	400-1000 ±2.0
Radius & Chamfer	0.5 - 33 - 6 ±2.0 ±1°		6 - 30 ±2.0 ±1°	30-120 ±0.8		
Mmtrs	±1.0 at 10	10-50	50-120	120-400	over 400	

UNSPECIFIED TOLERANCES WILL BE IN ACCORDANCE WITH DIN ISO 2768-1 class C – Coarse

NOTE:- UNSPECIFIED RADIOUS ARE 0.3 mm.

NOTE:- ALL DIMENSIONS ARE IN mm.

AREA:- 1902.2111 Sqmm^	ALLOY/TEMPER:- 6061 T6	
EX PERIMETER:- 803.5016 MM	FLATNESS:-±0.8mm^	
WEIGHT:- 5.136 Kg/Mtr.	TOLERANCES:	
DESCRIPTION:- SOLDIER W/O LIP	ANGULARITY:-±2°	CHECKED BY:-
PARTY DRG NO:-	straightness:-1.70meter	APPROVED BY:-
SECTION NO:- NP-47	TWIST:-1.70mm/meter	SCALE:- 1:1

Global Solutions For Aluminium Extrusions

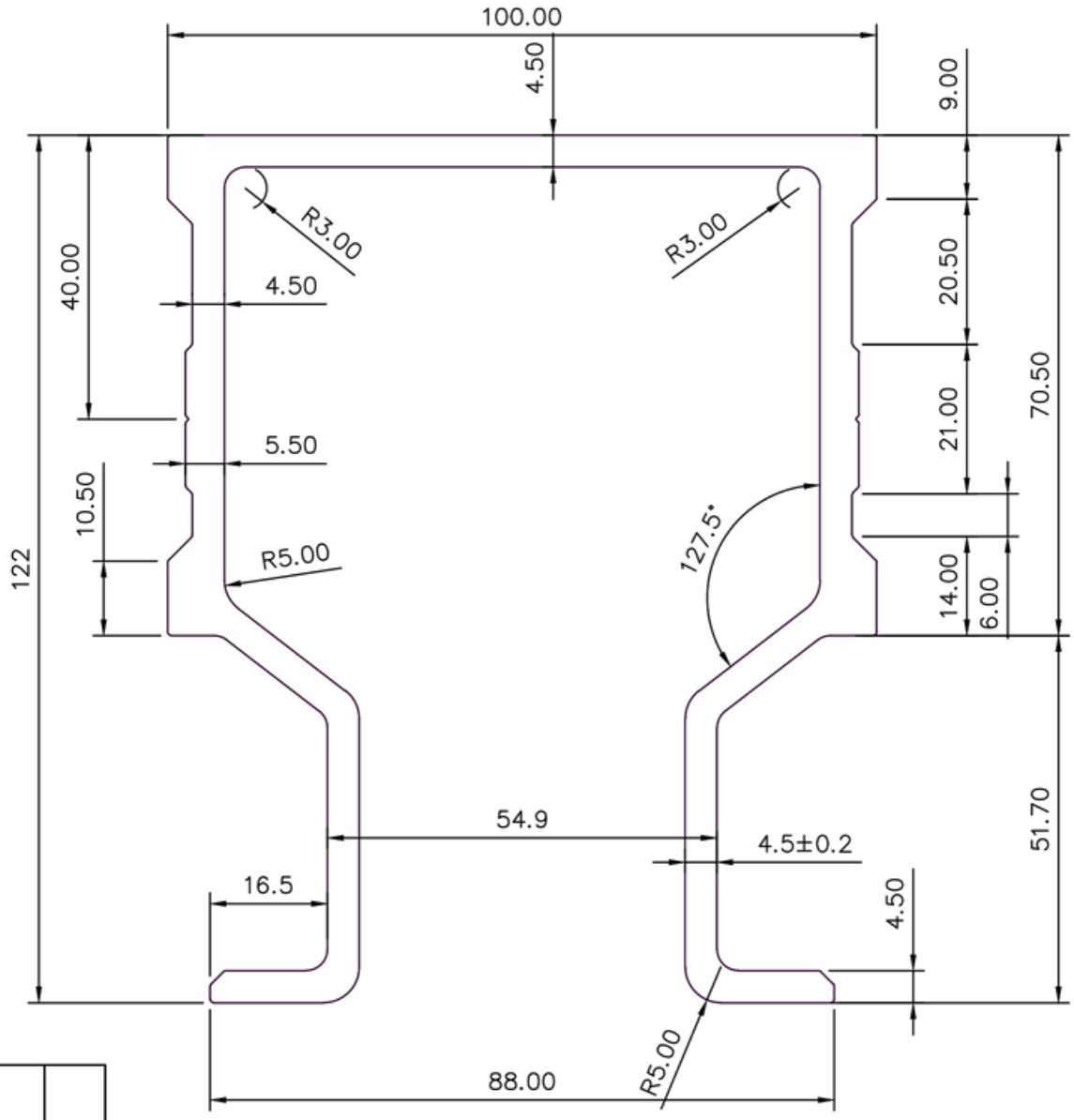

UNSPECIFIED TOLERANCES WILL BE IN ACCORDANCE WITH DIN ISO 2768-1 class C = Coarse

Dimension	0.5 - 33 - 6	6 - 30	30-120	120-400	400-1000
Longitudional	±0.2 ±0.4	±0.3	±0.5	±0.8	±1.2	±2.0
Degree & Minutes	0.5 - 33 - 6 ±2.0 ±1°		30-120 ±0.8 ±0°30'		
Diameter	±1.0 at 10	10-50	50-120	120-400	over 400
			±0°15'		

NOTE:- ALL DIMENSIONS ARE IN mm.

AREA:- 1915.4290 Sqmm^	ALLOY/TEMPER:- 6061 T6	
EX PERIMETER:- 779.8534 MM	FLATNESS:-±0.7mm^	
WEIGHT:- 5.171 Kg/Mtr.	TOLERANCES:	
DESCRIPTION:- AS PER DRAWING	ANGULARITY:-±1°	
PARTY DRG NO:- SOLDIER W/O LIP	straightness:-1.50meter	APPROVED BY:-
SECTION NO:- NP-115	TWIST:-1.50mm/meter	SCALE:- 1:1

Global Solutions For Aluminium Extrusions

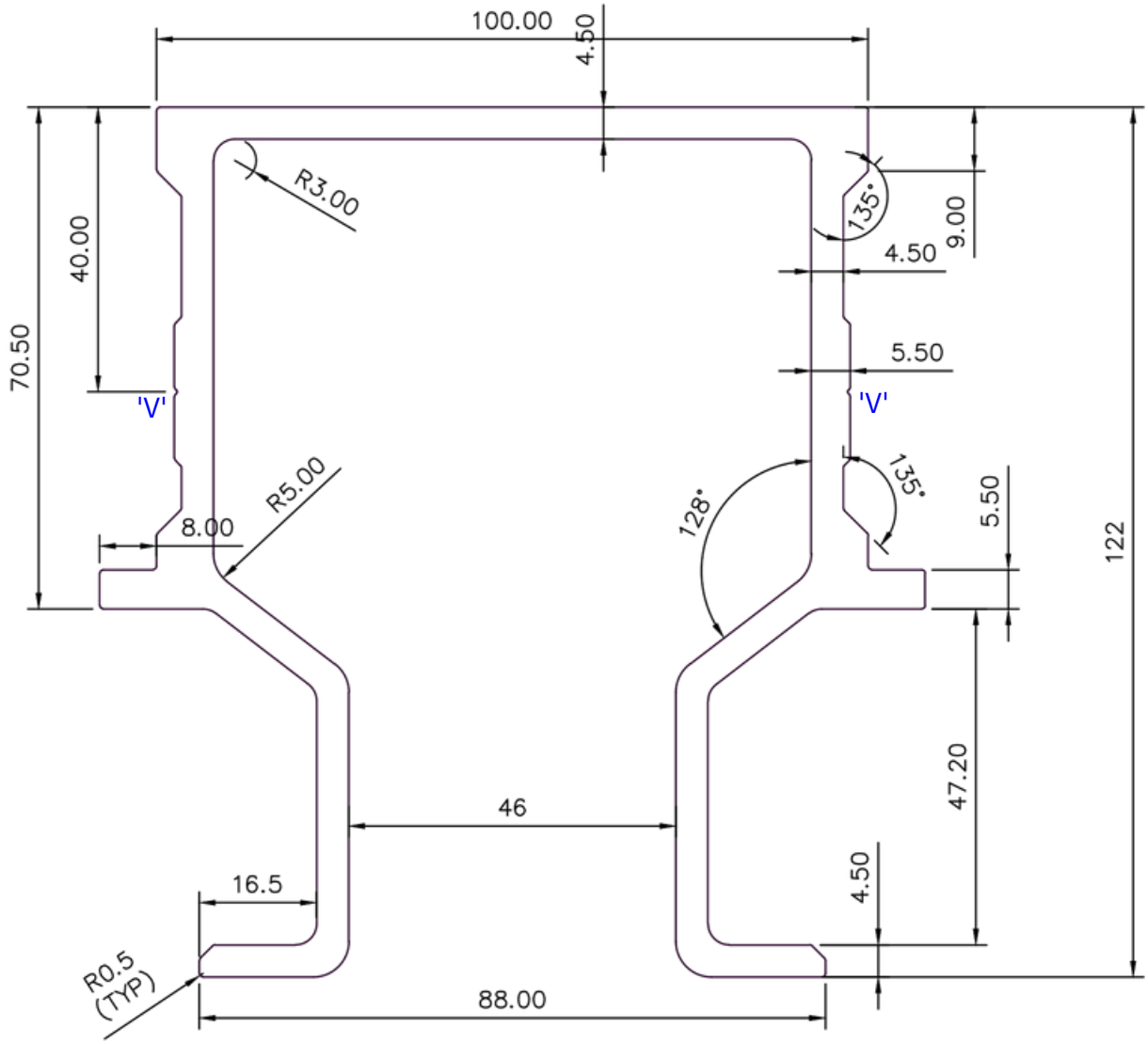

UNSPECIFIED TOLERANCES WILL BE IN ACCORDANCE WITH DIN ISO 2768-1 class C = Coarse

Dimension	0.5 - 33 - 6	±0.3	6 - 30 ±1°	30-120	120-400	400-1000
Longitudional	±0.2		±0.5	±0.8	±1.2	±2.0
Radius & Chamfer	0.5 - 33 - 6	±1.0	6 - 30	30-120		
	±0.4		±2.0 ±1°	±0.8		
Moulds	at 10	10-50	50-120	120-400	over 400	
			±0°30°	±0°15°		

NOTE:- ALL DIMENSIONS ARE IN mm.

AREA:- 2003.4290 Sqmm^	ALLOY/TEMPER:- 6061 T6	
EX PERIMETER:- 810.9950 MM	FLATNESS:-±0.7mm^	
WEIGHT:- 5.409 Kg/Mtr.	TOLERANCES:	
DESCRIPTION:- AS PER DRAWING	ANGULARITY:-±1°	
PARTY DRG NO:- SOLDIER W/LIP	straightness:-1.50meter	APPROVED BY:-
SECTION NO:- NP-114	TWIST:-1.50mm/meter	SCALE:- 1:1

Global Solutions For Aluminium Extrusions

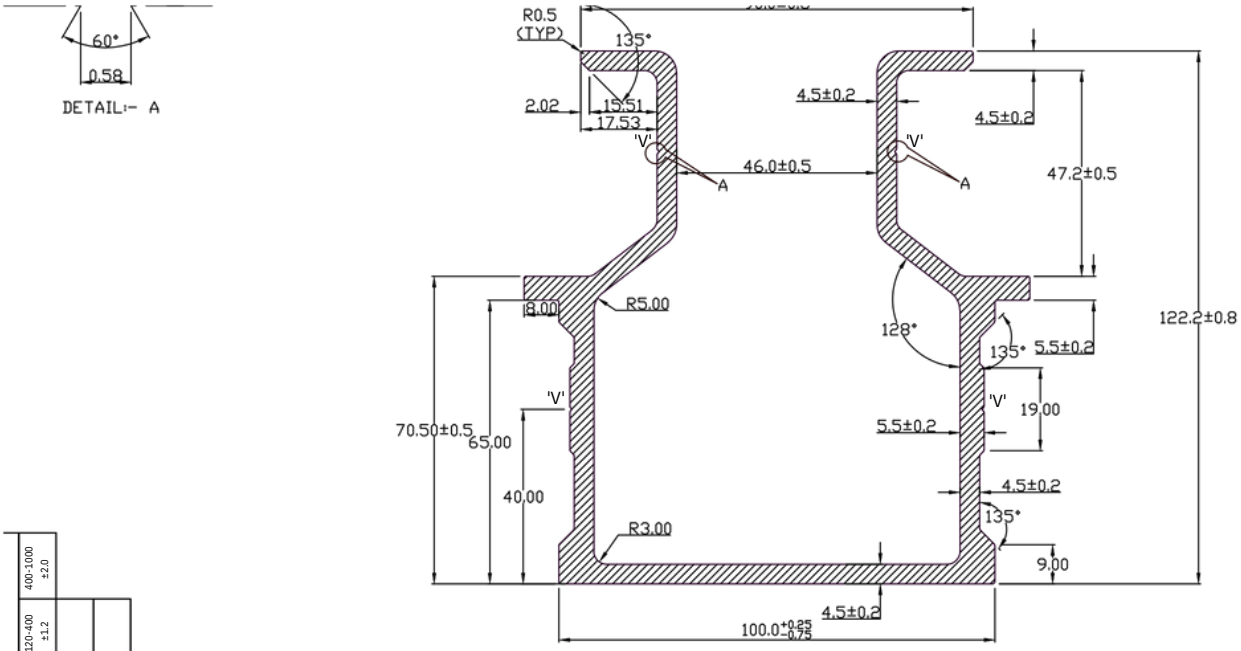

WITH DIN ISO 2768-1 class C = Coarse										
Dimension Longitudional	0.5 - 3 - 6 ±0.2 ±0.4	±0.3	6 - 30 ±0.5 ±1°	30-120 ±0.8	120-400 ±1.2	400-1000 ±2.0				
Mm/mm Deviation for angles	0.5 - 3 - 6		6 - 30 ±2.0 ±1°	30-120 ±0.8						
Mm/mm Deviation for angles	±1.0 at 10	10-50	50-120	120-400	over 400					

±30°
±15°

NOTE:- UNSPECIFIED RADIUS:- 0.30 mm.
NOTE:- ALL DIMENSIONS ARE IN mm.

AREA:- 2011.9246 Sqmm^	ALLOY/TEMPER:- 6061 T6	
EX PERIMETER:- 815.5657 MM	FLATNESS:-±0.45mm^	
WEIGHT:- 5.4322 Kg/Mtr.	TOLERANCES:	
DESCRIPTION:- AS PER DRAWING	ANGULARITY:-±1°	(M) No.:-
PARTY DRG NO:- 1121	straightness:-1.00meter	APPROVED BY:-
SECTION NO:- NP-275	TWIST:-1.00mm/meter	SCALE:- 1:1

Global Solutions For Aluminium Extrusions

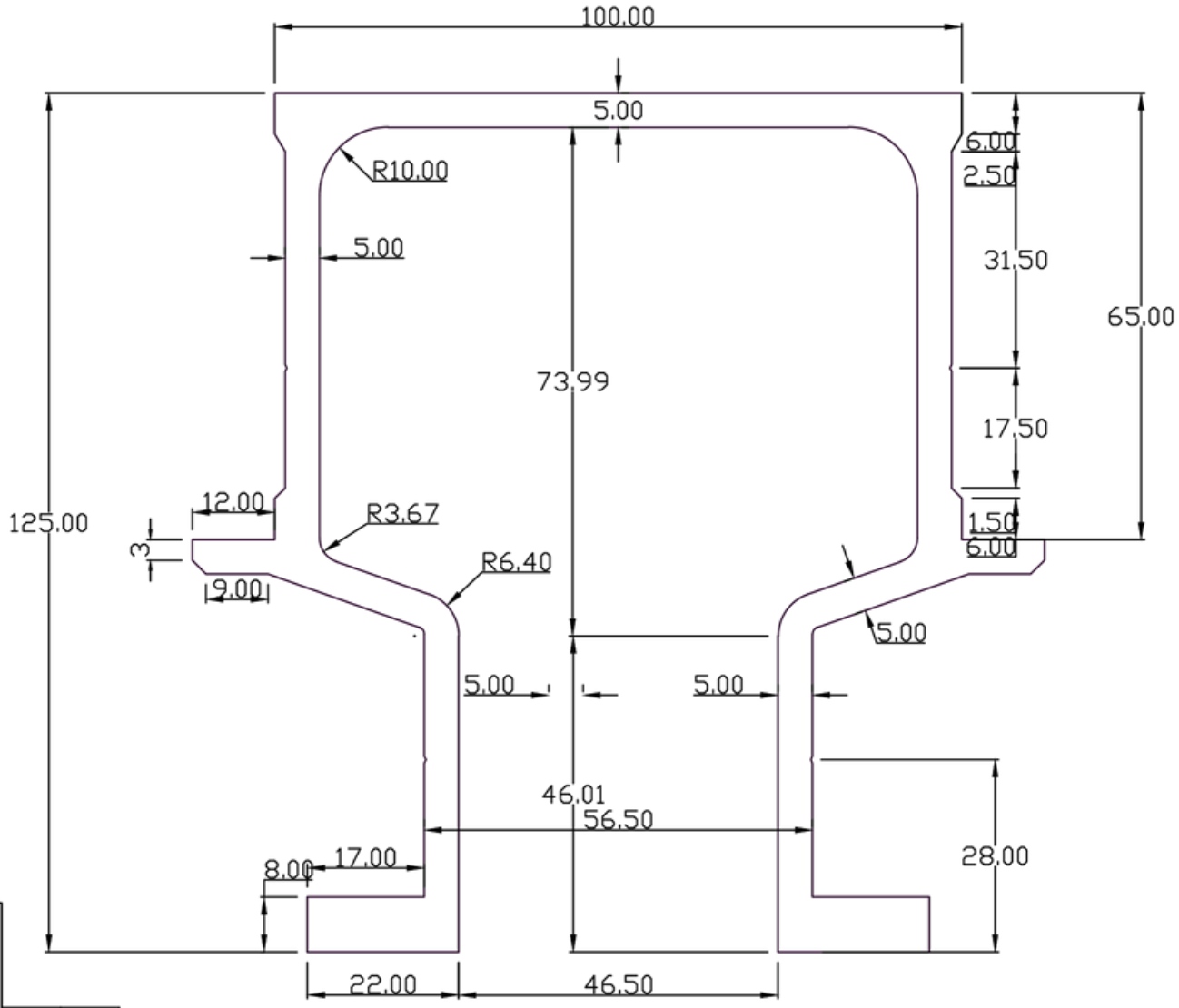

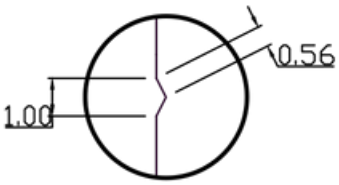

NOTE:- ALL DIMENSIONS ARE IN mm.

WITH DIN ISO 2768-1 class C = Coarse					
Dimension Longitudional	0.5 - 33 - 6 ±0.2 ±0.4	±0.3	6 - 30 ±0.5	30-120 ±0.8	120-400 ±1.2
Degree & Chamfer	0.5 - 33 - 6		6 - 30 ±2.0	30-120 ±0.8	±0°15°
Straightness	±1.0 at 10	10-50	50-120120-400over 400		

AREA:- 2313.1877 Sqmm^	ALLOY/TEMPER:- 6063 T6	
EX PERIMETER:- 849.4630 MM	FLATNESS:-±0.9mm^	
WEIGHT:- 6.2456 Kg/m	TOLERANCES:	PARTY NAME:-
DESCRIPTION:-	ANGULARITY:-±1.4°	(M) No.:-
	straightness:-1.50mm/meter	APPROVED BY:-
SECTION NO:- NP-191	TWIST:-2.50mm/meter	SCALE:- 1:1

Global Solutions For Aluminium Extrusions

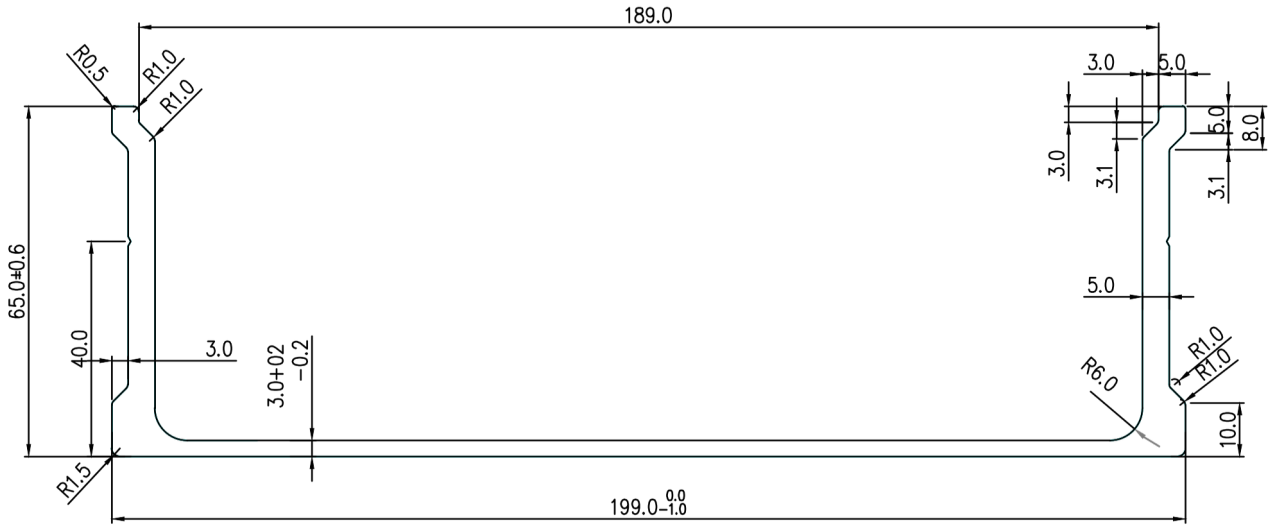

UNSPECIFIED TOLERANCE ESWILL BE IN ACCORDANCE WITH DIN ISO 2768-1 class C - Coarse								
Dimension Longitudional	0.5 - 33 - 6 ±0.2 ±0.4	±0.3	6 - 30 ±1° ±0.5	90-120 ±0.8	120-400 ±1.2		400-1000 ±2.0	
Radius & Chamfer	0.5 - 33 - 6		6 - 30 ±1° ±2.0	30-120 ±0.8				
Angle	±1.0 at 10	10-505	120120-400	over 400				

NOTE:- UN-SPECIFIEDRADIUSARE 0.4 mm
NOTE:- ALL DIMENSIONS ARE IN mm.

AREA:- 1293.0912 Sqmm^	ALLOY/TEMPER:- 6061 T6	DRAWN BY:-
EX PERIMETER:- 645.7551 MM	FLATNESS:-±0.8mm^	DATE:- 01/11/2018
WEIGHT:- 3.4913 Kg/Mtr.	TOLERANCES:	PARTY NAME:-
DESCRIPTION:	ANGULARITY:-±2°	CHECKED BY:-
PARTY DRG NO:-	straightness:-1.0meter	APPROVED BY:-
SECTION NO:- N-1578	TWIST:-1.0mm/meter	SCALE:- 1:1

DRAWING/A-1001-N/2018/OCT.-18/SE-01-N DRG.

Global Solutions For Aluminium Extrusions

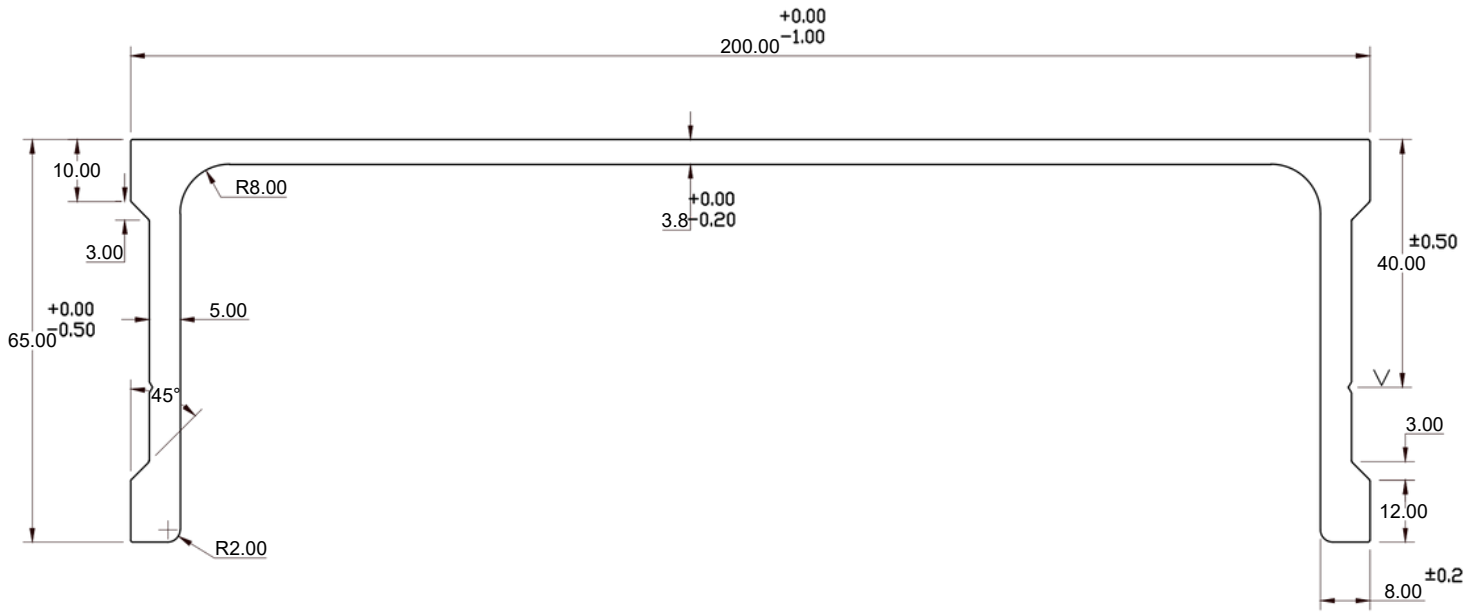

UNSPECIFIED TOLERANCES WILL BE TRACE WITH DIN ISO 2768-1 class C = Coarse ACCORDANCE

Dimension	0.5 - 33 - 6	6 - 30	30-120	120-400	400-1000
Longitudional	±0.2	±0.5	±0.8	±1.2	±2.0
Degree	±0.3	±0.4	±0.8	±1.0	±0.8
Radius & Chamfer	at 10	10-50	50-120	120-400	over 400

NOTE:- UN-SPECIFIED CORNNER RADIOUS ARE 0.30 mm.
NOTE:- ALL DIMENSIONS ARE IN mm.

AREA:- 1550.4872 Sqmm^	ALLOY/TEMPER:- 6063 T6	DRAWN BY:-
EX PERIMETER:- 648.2652 MM	FLATNESS:-±0.8mm^	DATE:- 15/02/2019
WEIGHT:- 4.186 Kg/Mtr.	TOLERANCES:	PARTY NAME:-
DESCRIPTION:- CHANNEL 200	ANGULARITY:-±2°	CHECKED BY:-
PARTY DRG NO:-MCE/AFW/CHANNEL/200	straightness:-1.70meter	APPROVED BY:-
SECTION NO:- N-1710	TWIST:-1.70mm/meter	SCALE:- 1:1

DRAWING/A-1001-N/2018/JAN.-19/SE-01-N DRG.

UNSPECIFIED TOLERANCES WILL BE IN ACCORDANCE WITH DIN ISO 2768-1 class C= Coarse

Dimension	0.5 - 33 - 6	6 - 30	30-120	120-400	400-1000
Longitudional	±0.2 ±0.4	±0.5	±0.8	±1.2	±2.0
Radius & Chamfer	0.5 - 33 - 6	6 - 30 ±2.0 ±1°	30-120 ±0.8		
Angular	±1.0 at 10	10-50 ±30°	50-120 ±15°	120-400 over 400	

NOTE:- UNSPECIFIED RADIOUS ARE 0.3 mm.
NOTE:- ALL DIMENSIONS ARE IN mm.

AREA:- 1352.5501 Sqmm^	ALLOY/TEMPER:- 6061 T6	DRAWN BY:-
EX PERIMETER:- 653.7412 MM	FLATNESS:-±0.8mm^	DATE:- 24/10/2019
WEIGHT:- 3.651 Kg/Mtr.	TOLERANCES:	PARTY NAME:-
DESCRIPTION:- CHANNEL 200	ANGULARITY:-±2°	CHECKED BY:-
PARTY DRG NO:-	straightness:-1.70meter	APPROVED BY:-
SECTION NO:- NP-55	TWIST:-1.70mm/meter	SCALE:- 1:1

DRAWING/A-1001-N/2019/APRIL-19/SE-01-N DRG.

Global Solutions For Aluminium Extrusions

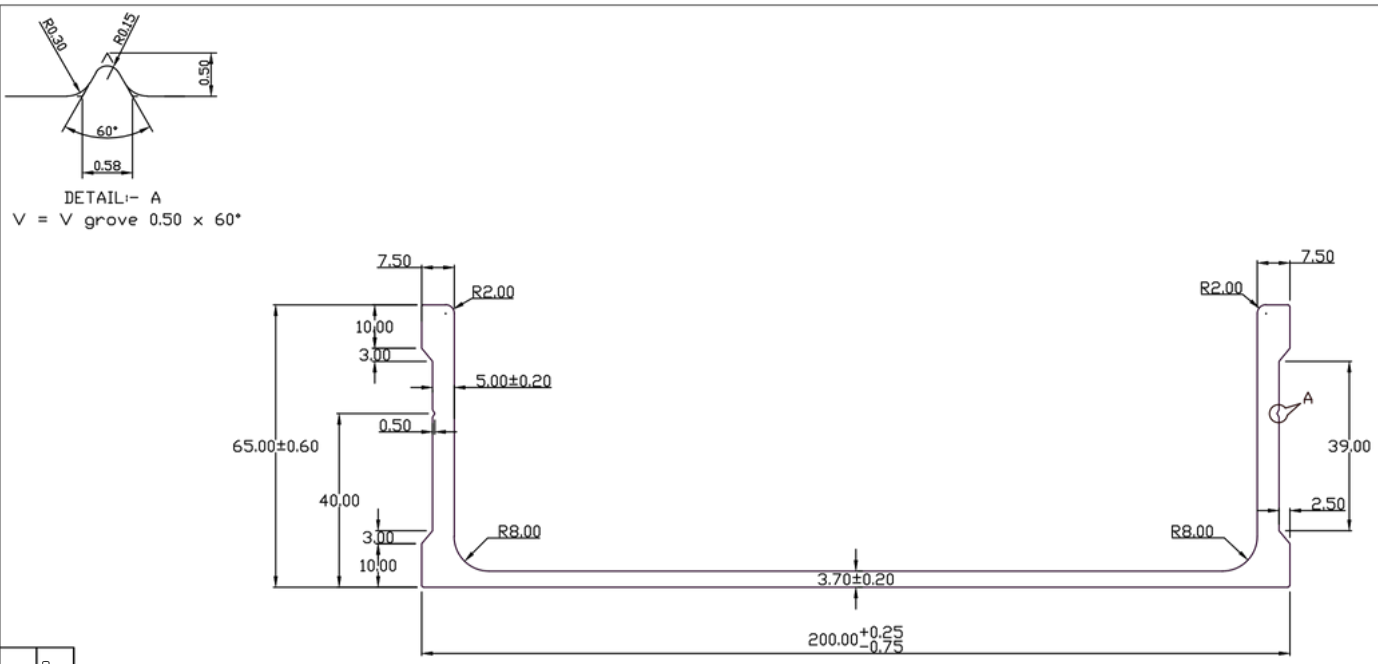

UNSPECIFIED TOLERANCES WITH DIN ISO 2768-1 class C in CONFORMANCE										
Dimension Longitudional	0.5 - 33 - 6 ±0.2 ±0.4	±0.3	6 - 30 ±0.5	6 - 30 ±2.0 ±1°	30-120 ±0.8	120-400 ±1.2	400-1000 ±2.0			
Dimension Radius angle	0.5 - 33 - 6									
Minimum	±1.0 at 30	10-50	120-400	over 400						

NOTE:- UNSPECIFIED RADIUS:- 0.30 mm.
NOTE:- ALL DIMENSIONS ARE IN mm.

AREA:- 1474.2488 Sqmm^	ALLOY/TEMPER:- 6061 T6	
EX PERIMETER:- 647.4856 MM	FLATNESS:-±0.7mm^	
WEIGHT:- 3.9804 Kg/Mtr.	TOLERANCES:	
DESCRIPTION:- AS PER DRAWING	ANGULARITY:-±1°	(M) No.:-
PARTY DRG NO:- 1030	straightness:-1.00meter	APPROVED BY:-
SECTION NO:- NP-306	TWIST:-1.00mm/meter	SCALE:- 1:1

Global Solutions For Aluminium Extrusions

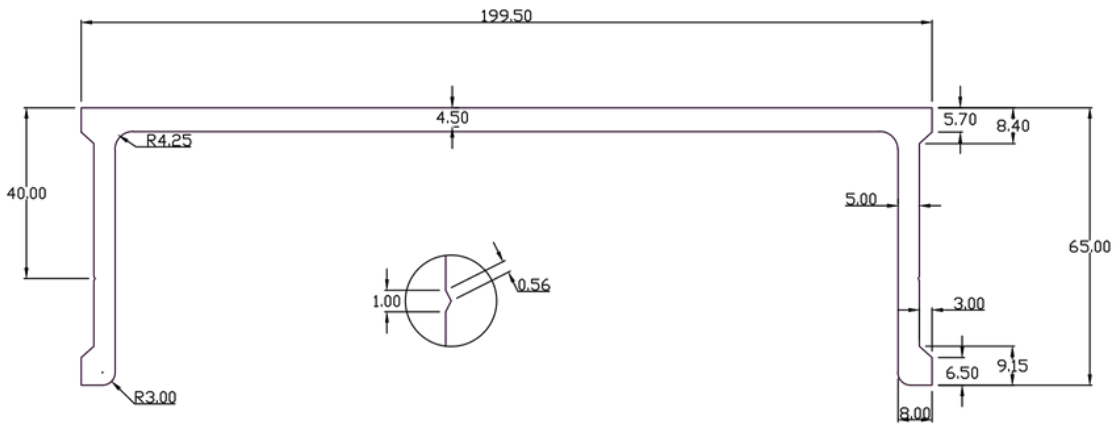

UNSPECIFIED TOLERANCE WITH DIN ISO 2768-1 class Co. Coarse IN ACCORDANCE WITH THE TYPE

Dimension Longitudional	0.5 - 33 - 6 ±0.2 ±0.4	±0.3	6 - 30 ±1° ±0.5	90-120 ±0.8	120-400 ±1.2	400-1000 ±2.0
Radius Diameter	0.5 - 33 - 6		6 - 30 ±2.0 ±1°	30-120 ±0.8		
Mm	±1.0 at 10	10-50	50-120	120-400	over 400	

±30°
±15°

NOTE:- UNSPECIFIED RADIUS:- 0.30 mm.
NOTE:- ALL DIMENSIONS ARE IN mm.

AREA:- 1770.4897 Sqmm^	ALLOY/TEMPER:- 6061 T6	
EX PERIMETER:- 652.8904 MM	FLATNESS:-±0.7mm^	
WEIGHT:- 4.780 Kg/Mtr.	TOLERANCES:	
DESCRIPTION:- AS PER DRAWING	ANGULARITY:-±1°	(M) No.:-
PARTY DRG NO:- 200 CHX	straightness:-1.50meter	APPROVED BY:-
SECTION NO:- NP-170	TWIST:-1.50mm/meter	SCALE:- 1:1

Global Solutions For Aluminium Extrusions

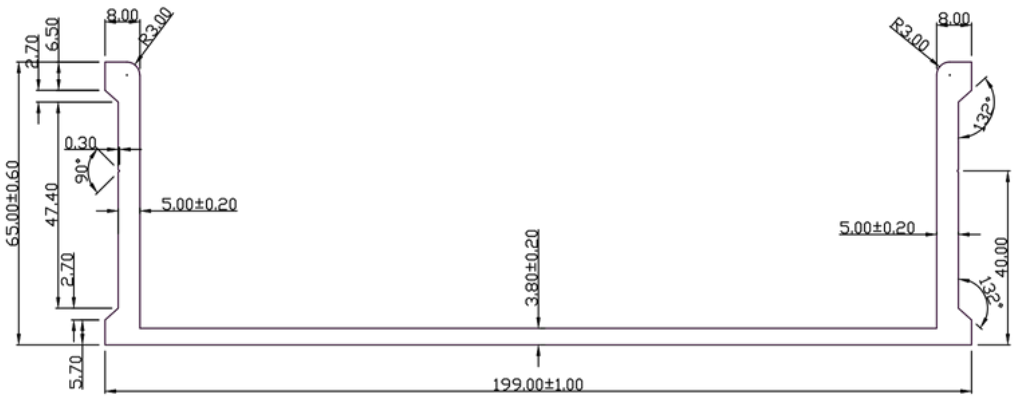

UNSPECIFIED TOLERANCES WELDS ACCORDANCE WITH DIN ISO 2768-1 class C Coarse								
Dimension Longitudional	0.5 - 33 - 6 ±0.2	±0.3	6 - 30 ±0.5	30-90 ±0.8	90-120 ±0.8	120-400 ±1.2	400-1000 ±2.0	
Dimension Radius & Angular	0.5 - 33 - 6 ±0.4	±1.0	6 - 30 ±2.0	30-120 ±0.8				
Mm/mm	at 10	10-50	50-120	120-400	over 400			

±30°
±15°

NOTE:- UNSPECIFIED RADIUS:- 0.30 mm.
NOTE:- ALL DIMENSIONS ARE IN mm.

AREA:- 1430.4766 Sqmm^	ALLOY/TEMPER:- 6061 T6	
EX PERIMETER:- 653.6692 MM	FLATNESS:-±0.7mm^	
WEIGHT:- 3.8622 Kg/Mtr.	TOLERANCES:	
DESCRIPTION:- AS PER DRAWING	ANGULARITY:-±1°	(M) No.:-
PARTY DRG NO:-	straightness:-1.50meter	APPROVED BY:-
SECTION NO:- NP-352	TWIST:-1.50mm/meter	SCALE:- 1:1

Global Solutions For Aluminium Extrusions

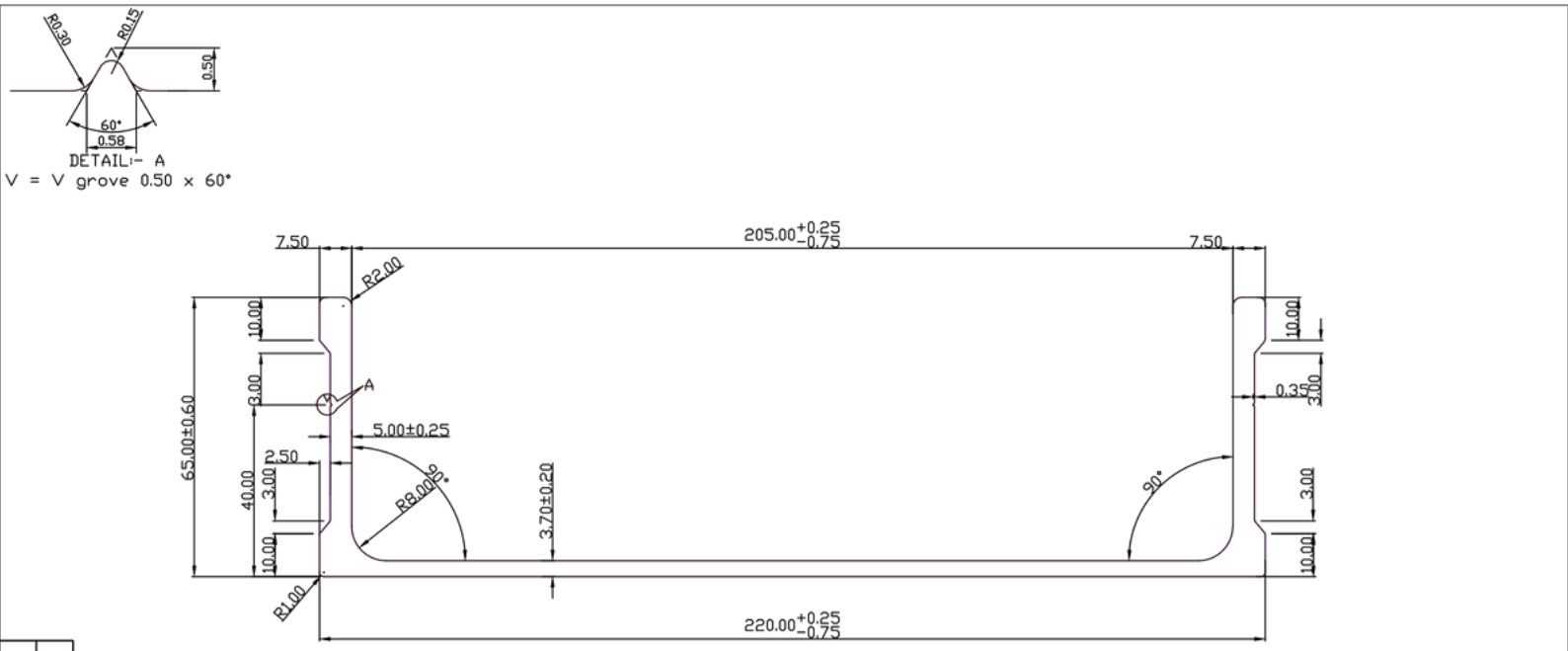

UNSPECIFIED TOLERANCES WELDS WITH DIN ISO 2768-1 class C - Coarse IN ACCORDANCE										
Dimension Longitudional	0.5 - 33 - 6 ±0.2	±0.3	6 - 30 ±0.5	30-90 ±0.8	90-120 ±0.8	120-400 ±1.2	400-1000 ±2.0			
Dimension Radius & angle	0.5 - 33 - 6 ±0.4	±1.0	6 - 30 ±2.0	30-120 ±0.8						
Machining Tolerance	at 10	10-50	50-120	120-400	over 400					

±30°
±15°

NOTE:- UNSPECIFIED RADIUS:- 0.30 mm.
NOTE:- ALL DIMENSIONS ARE IN mm.

AREA:- 1547.5801 Sqmm^	ALLOY/TEMPER:- 6061 T6	
EX PERIMETER:- 685.8703 MM	FLATNESS:-±0.7mm^	
WEIGHT:- 4.1784 Kg/Mtr.	TOLERANCES:	
DESCRIPTION:- AS PER DRAWING	ANGULARITY:-±1°	(M) No.:-
PARTY DRG NO:-	straightness:-1.50meter	APPROVED BY:-
SECTION NO:- NP-332	TWIST:-1.50mm/meter	SCALE:- 1:1

Global Solutions For Aluminium Extrusions

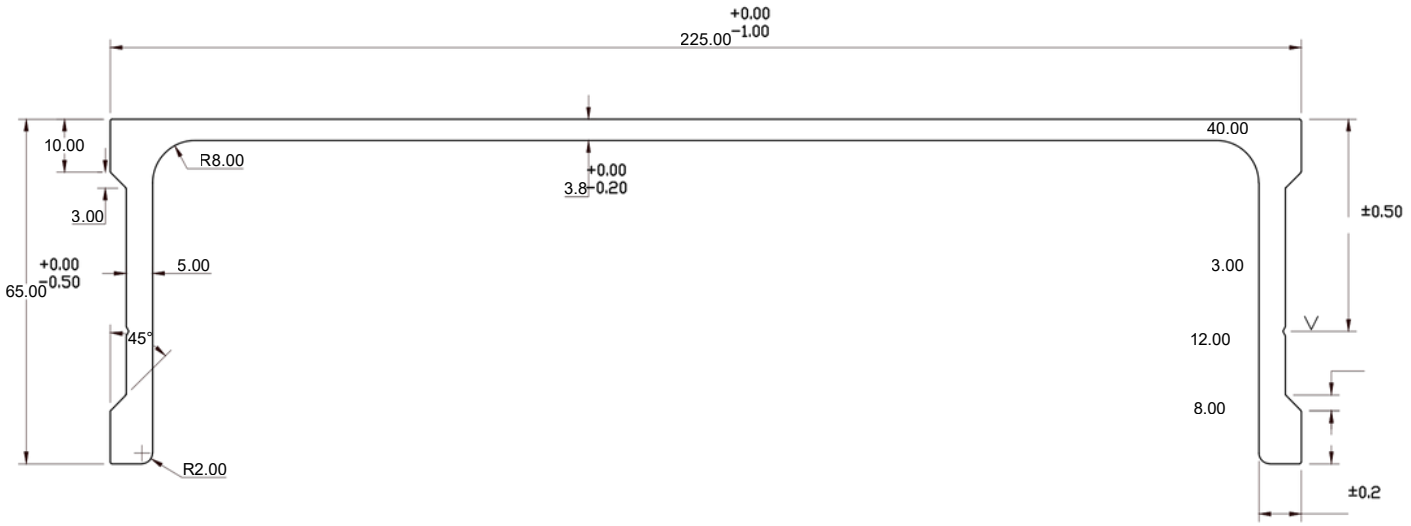

UNSPECIFIED TOLERANCES WILL BE IN ACCORDANCE WITH DIN ISO 2768-1 class C = Coarse								
Dimension Longitudional	0.5 - 33 - 6 ±0.2	±0.3	6 - 30 ±0.5	30-120 ±0.8	120-400 ±1.2	400-1000 ±2.0		
Degree Chamfer Radius	0.5 - 33 - 6 ±0.4		6 - 30 ±2.0	30-120 ±0.8	±0°15°			
	±1.0 at 10	10-50	50-120	120-400	over 400			

NOTE:- UN-SPECIFIED CORNNER RADIOUS ARE 0.30 mm.
NOTE:- ALL DIMENSIONS ARE IN mm.

AREA:- 1650.7389 Sqmm^	ALLOY/TEMPER:- 6063 T6	
EX PERIMETER:- 698.2652 MM	FLATNESS:-±0.8mm^	
WEIGHT:- 4.457 Kg/Mtr.	TOLERANCES:	
~~DESCRIPTION:- CHANNEL 225~~	ANGULARITY:-±2°	CHECKED BY:-
	straightness:-1.70meter	APPROVED BY:-
SECTION NO:- N-1711	TWIST:-1.70mm/meter	SCALE:- 1:1

DRAWING/A-1001-N/2018/JAN.-19/SE-01-N DRG.

Global Solutions For Aluminium Extrusions

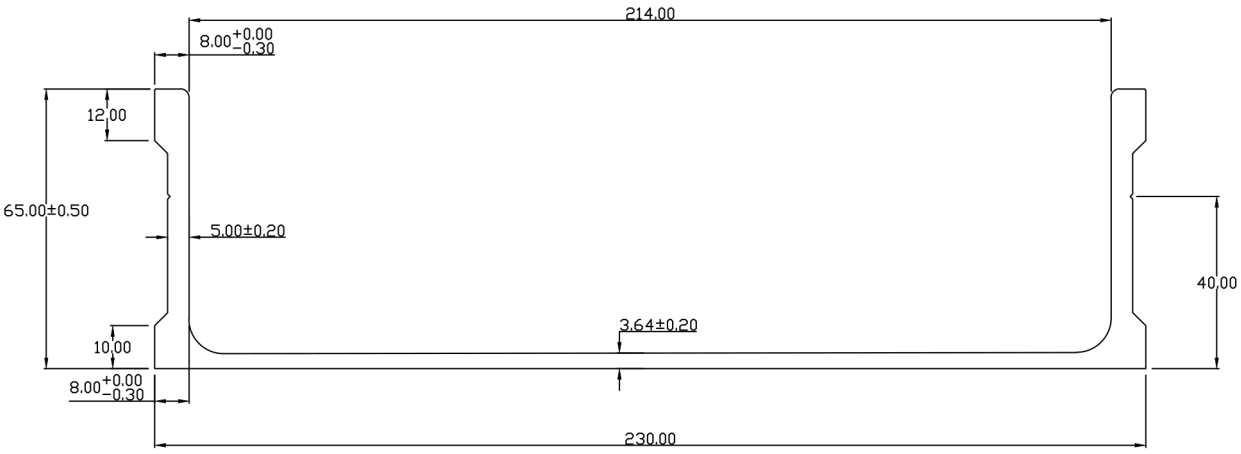

Dimension	0.5 - 33 - 6	6 - 30	30-120	120-400	400-1000
Longitudional	±0.2	±0.5	±0.8	±1.2	±2.0
	±0.3	±1°	±0.8		
		±1.0			
		±2.0			
		10-50	50-120	120-400	over 400
		at 10			

UNSPECIFIED TOLERANCES WILL BE IN ACCORDANCE WITH DIN ISO 2768-1 FINE CODE

NOTE:- UNSPECIFIED RADIUS:- 0.30 mm.
NOTE:- ALL DIMENSIONS ARE IN mm.

AREA:- 1603.6637 Sqmm^	ALLOY/TEMPER:- 6061 T6	
EX PERIMETER:- 709.7598 MM	FLATNESS:-±0.7mm^	
WEIGHT:- 4.3298 Kg/Mtr.	TOLERANCES:	
DESCRIPTION:- AS PER DRAWING	ANGULARITY:-±1°	(M) No.:-
	straightness:-1.50meter	APPROVED BY:-
SECTION NO:- NP-193	TWIST:-1.50mm/meter	SCALE:- 1:1

Global Solutions For Aluminium Extrusions

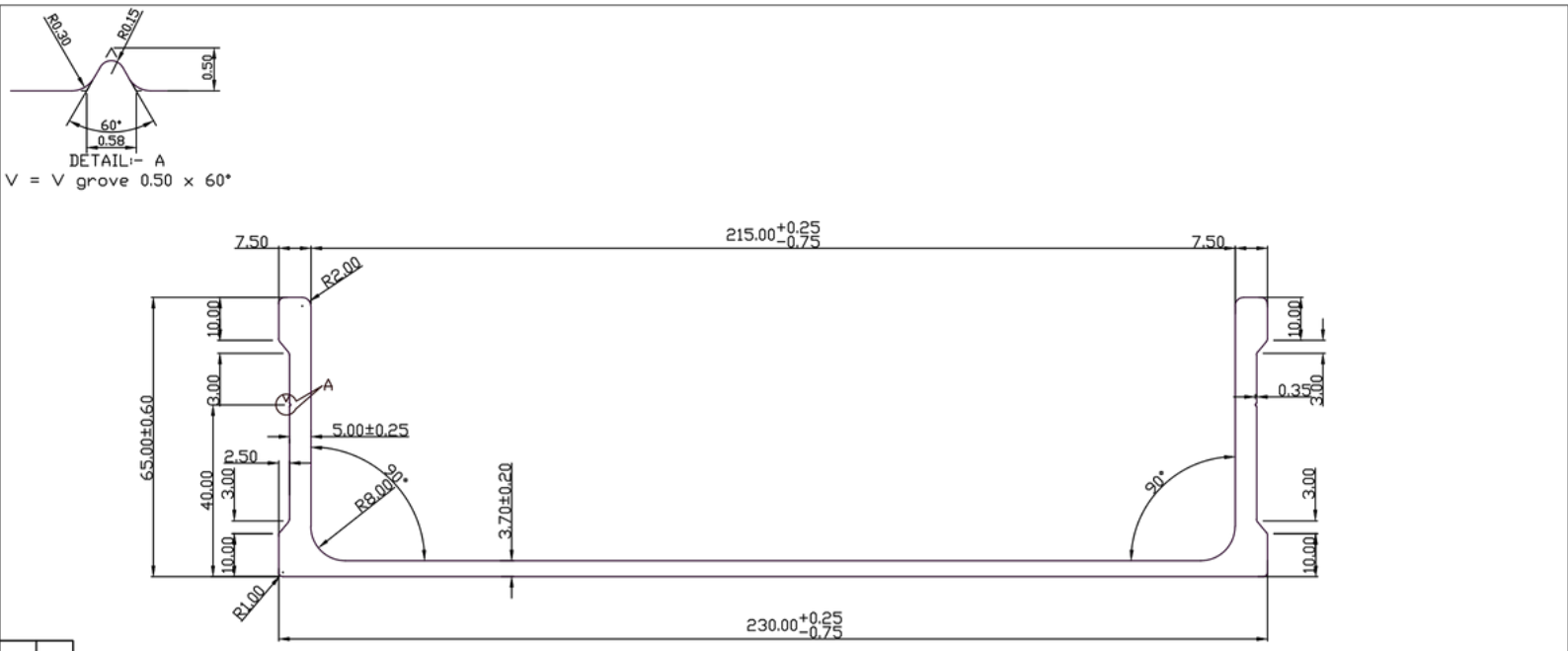

UNSPECIFIED TOLERANCES WELDS IN ACCORDANCE WITH DIN ISO 2768-1 class C - Coarse										
Dimension Longitudional	0.5 - 33 - 6 ±0.2	±0.3	6 - 30 ±0.5	30-90-120 ±0.8	120-400 ±1.2	400-1000 ±2.0				
Dimension Radius/Diameter	0.5 - 33 - 6 ±0.4	±1.0	6 - 30 ±2.0	30-120 ±0.8						
Mounting Angle	at 10	10-50	50-120	120-400	over 400					

±30°
±15°

NOTE:- UNSPECIFIED RADIUS:- 0.30 mm.
NOTE:- ALL DIMENSIONS ARE IN mm.

AREA:- 1584.5801 Sqmm^	ALLOY/TEMPER:- 6061 T6	
EX PERIMETER:- 705.8703 MM	FLATNESS:-±0.7mm^	
WEIGHT:- 4.2783 Kg/Mtr.	TOLERANCES:	
DESCRIPTION:- AS PER DRAWING	ANGULARITY:-±1°	(M) No.:-
PARTY DRG NO:-	straightness:-1.50meter	APPROVED BY:-
SECTION NO:- NP-338	TWIST:-1.50mm/meter	SCALE:- 1:1

Global Solutions For Aluminium Extrusions

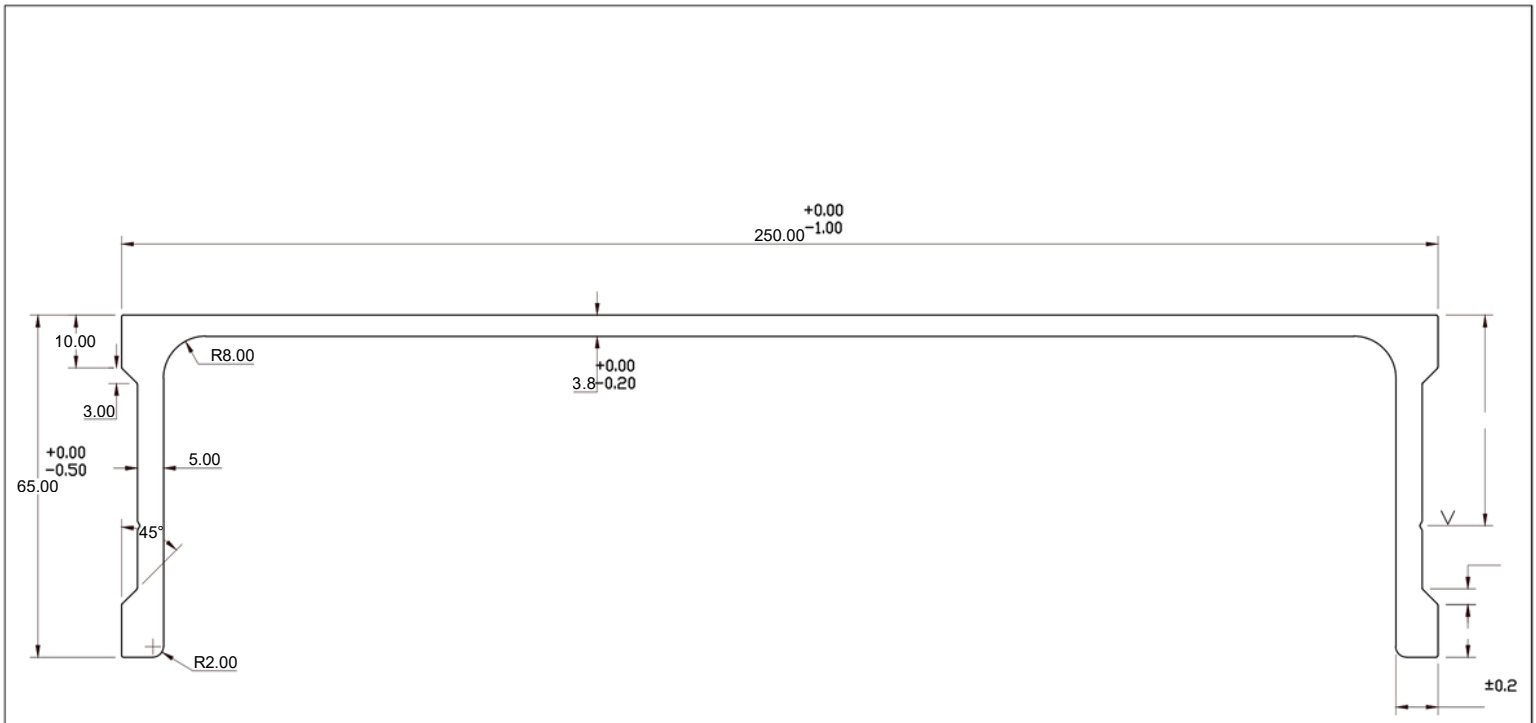

UNSPECIFIED TOLERANCES WILL BE MADE IN ACCORDANCE WITH DIN ISO 2768-1 class C = Coarse								
Dimension Longitudional	0.5 - 33 - 6 ±0.2	±0.3	6 - 30 ±0.5	30-120 ±0.8	120-400 ±1.2	400-1000 ±2.0		
Degree	0.5 - 33 - 6 ±0.4	±1.0	6 - 30 ±2.0	30-120 ±0.8	±0°15'			
Radius & Chamfer	at 10	10-50	50-120120-400over 400					

NOTE:- UN-SPECIFIED CORNNER RADIOUS ARE 0.30 mm.
NOTE:- ALL DIMENSIONS ARE IN mm.

AREA:- 1750.9905 Sqmm^	ALLOY/TEMPER:- 6063 T6	
EX PERIMETER:- 748.2652 MM	FLATNESS:-±0.8mm^	
WEIGHT:- 4.727 Kg/Mtr.	TOLERANCES:	
DESCRIPTION:- CHANNEL 250	ANGULARITY:-±2°	CHECKED BY:-
	straightness:-1.70meter	APPROVED BY:-
SECTION NO:- N-1712	TWIST:-1.70mm/meter	SCALE:- 1:1

DRAWING/A-1001-N/2018/JAN.-19/SE-01-N DRG.

40.00

3.00

12.00

8.00

Global Solutions For Aluminium Extrusions

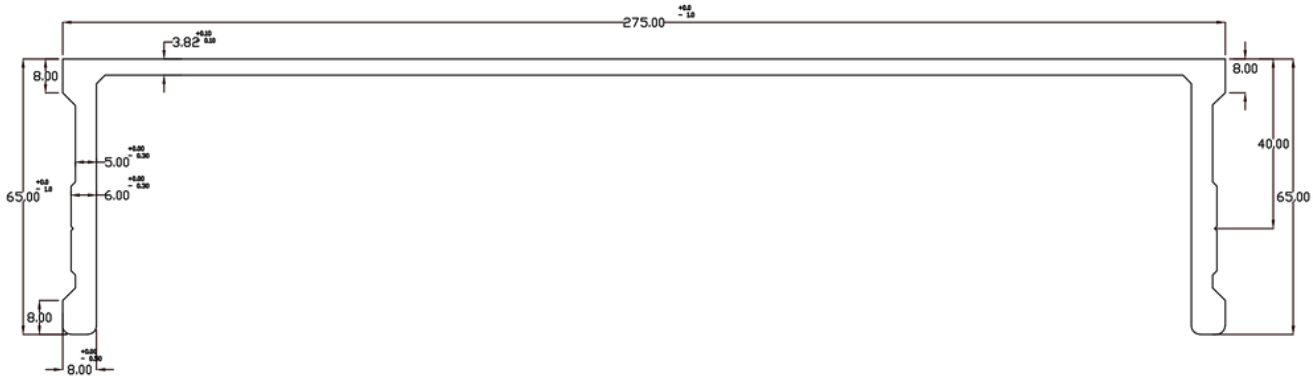

Dimension	0.5 - 33 - 6	6 - 30	30-120	120-400	400-1000
Longitudional	±0.4 ±0.2	±0.3	±0.5	±0.8	±1.2	±2.0
Mm/mtr.	0.5 - 33 - 6		6 - 30	30-120	
Degree	±1.0 at 10		±2.0	±0.8	
Degree/mtr.		10-50	120-400	Over 400	

NOTE:- ALL DIMENSIONS ARE IN mm.

±0°30'

±0°15'

AREA:- 1794.7506 Sqmm^	ALLOY/TEMPER:- 6061 T6	
EX PERIMETER:- 809.1104 MM	FLATNESS:-±0.7mm^	
WEIGHT:- 4.845 Kg/Mtr.	TOLERANCES:	
DESCRIPTION:- AS PER DRAWING	ANGULARITY:-±1°	CHECKED BY:-
	straightness:-1.50meter	APPROVED BY:-
SECTION NO:- NP-39	TWIST:-1.50mm/meter	SCALE:- 1:1

UNSPECIFIED TOLERANCE AS PER IS-2769-1984 GRADE-FINE UNLESS OTHERWISE SPECIFIED IN ACCORDANCE WITH THIS DRAWING.

Global Solutions For Aluminium Extrusions

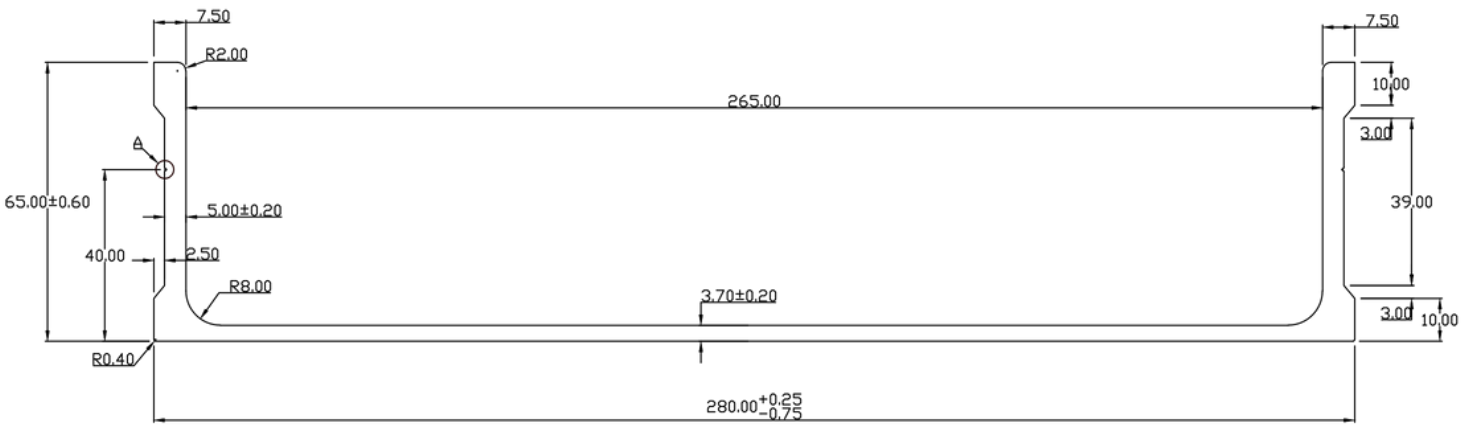

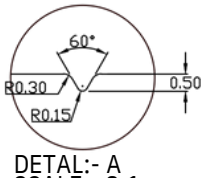

DETAL:- A
SCALE:- 8:1

UNSPECIFIED TOLERANCES WILL BE IN ACCORDANCE WITH DIN ISO 2768-1 CLASS COARSE

Dimension	0.5 - 33 - 6 ±0.2	0.5 - 33 - 6 ±0.4	at 10	±0.3	6 - 30 ±0.5	6 - 30 ±1	10-50	50-120 ±0.8	30-120 ±0.8	120-400 ±1.2	400-1000 ±2.0
Longitudional							50-120	120-400	over 400		
Mmetrical Bending Radius							±1°	±1.5°	±2°		

NOTE:- UNSPECIFIED RADIUS:- 0.30 mm.
NOTE:- ALL DIMENSIONS ARE IN mm.

AREA:- 1770.7072 Sqmm^	ALLOY/TEMPER:- 6061 T6	
EX PERIMETER:- 808.2543 MM	FLATNESS:-±0.7mm^	
WEIGHT:- 4.781 Kg/Mtr.	TOLERANCES:	
DESCRIPTION:- AS PER DRAWING	ANGULARITY:-±1°	
	straightness:-1.50meter	APPROVED BY:-
SECTION NO:- NP-136	TWIST:-1.50mm/meter	SCALE:- 1:1

Global Solutions For Aluminium Extrusions

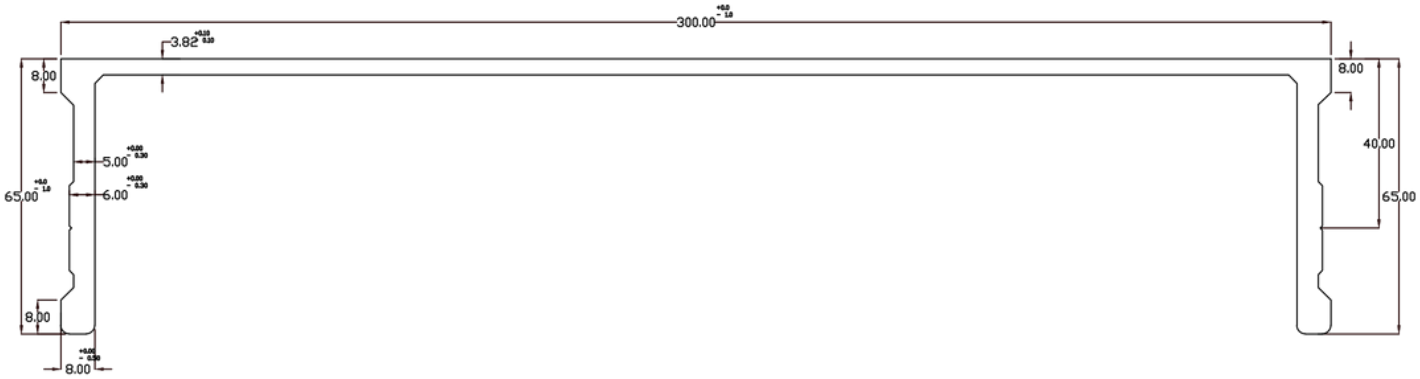

Dimension Longitudional	0.5 - 33 - 6	6 - 30	30-120	120-400	400-1000
	±0.2 ±0.4	±0.3 ±0.5	±0.8 ±0.8	±1.2	±2.0
Perpendicularity	0.5 - 33 - 6	6 - 30 ±1° ±2.0	30-120 ±0.8		
Straightness per meter	±1.0 at 10	10-50	50-120	120-400	over 400

±0°30'

±0°15'

NOTE:- ALL DIMENSIONS ARE IN mm.

AREA:- 1890.2371 Sqmm^	ALLOY/TEMPER:- 6061 T6	
EX PERIMETER:- 859.1104 MM	FLATNESS:-±0.7mm^	
WEIGHT:- 5.103 Kg/Mtr.	TOLERANCES:	
DESCRIPTION:- AS PER DRAWING	ANGULARITY:-±1°	CHECKED BY:-
PARTY DRG NO:- MFS-AL-65-40	straightness:-1.50meter	APPROVED BY:-
SECTION NO:- NP-38	TWIST:-1.50mm/meter	SCALE:- 1:1

UNSPECIFIED TOLERANCES WILL BE MADE IN ACCORDANCE WITH THE ISO STANDARD

Global Solutions For Aluminium Extrusions

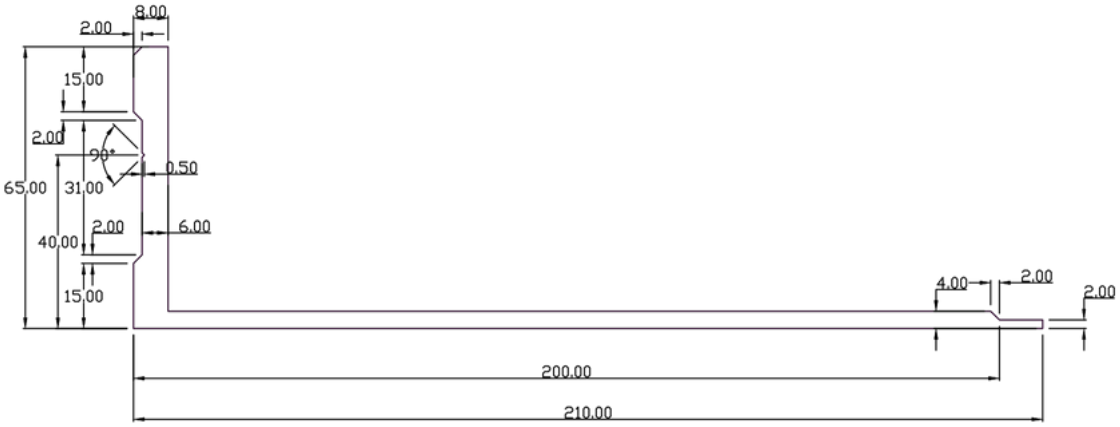

UNSPECIFIED TOLERANCES WILL BE IN ACCORDANCE WITH DIN ISO 2768-1 class C or Coarse									
Dimension Longitudional	0.5 - 33 - 6 ±0.2 ±0.4	±0.3	6 - 30 ±0.5	30-120 ±0.8	120-400 ±1.2	400-1000 ±2.0			
Dimension Radius	0.5 - 33 - 6 ±1° ±1.0 at 10		6 - 30 ±2.0 ±1°	30-120 ±0.8					
Mould Dimension		10-50	50-120	120-400	over 400				

NOTE:- UNSPECIFIED RADIUS:- 0.30 mm.
NOTE:- ALL DIMENSIONS ARE IN mm.

AREA:- 1237.7500 Sqmm^	ALLOY/TEMPER:- 6061 T6	
EX PERIMETER:- 549.7279 MM	FLATNESS:-±0.7mm^	
WEIGHT:- 3.3419 Kg/Mtr.	TOLERANCES:	PARTY NAME:-
DESCRIPTION:- AS PER DRAWING	ANGULARITY:-±1°	(M) No.:-
	straightness:-1.50meter	APPROVED BY:-
SECTION NO:- NP-294	TWIST:-1.50mm/meter	SCALE:- 1:1

Global Solutions For Aluminium Extrusions

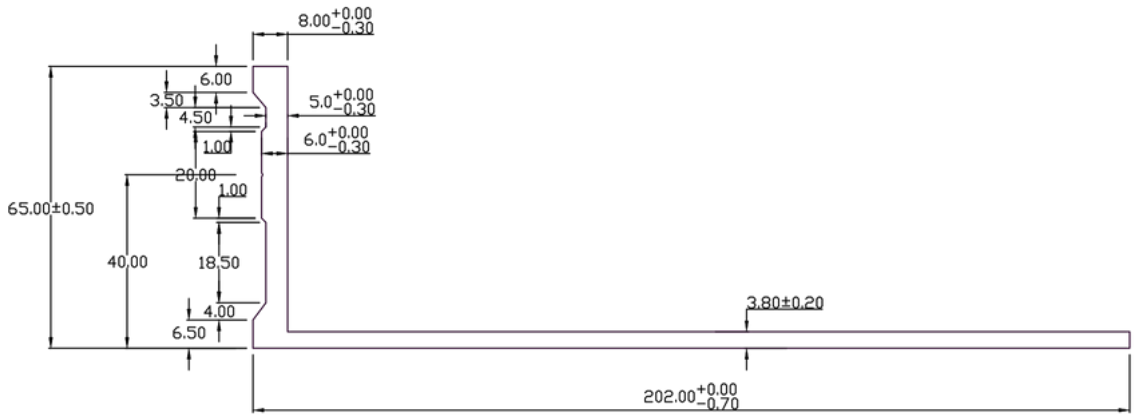

UNSPECIFIED TOLERANCES WILL BE IN ACCORDANCE WITH DIN ISO 2768-1 Fine Cut Class										
Dimension Longitudional	0.5 - 3	3 - 6	6 - 30	30-120	120-400	400-1000				
Manufacturing Tolerance	±0.2	±0.4	±0.3	±0.5	±0.8	±1.2	±2.0			
Dimension Radius	0.5 - 3	3 - 6	6 - 30	30-120	120-400	over 400				
Manufacturing Tolerance	±1.0 at 10		±2.0	±1°	±0.8					
			10-50	50-120	120-400	over 400				

NOTE:- UNSPECIFIED RADIUS:- 0.30 mm.
NOTE:- ALL DIMENSIONS ARE IN mm.

AREA:- 1132.6143 Sqmm^	ALLOY/TEMPER:- 6061 T6	
EX PERIMETER:- 545.0471 MM	FLATNESS:-±0.7mm^	
WEIGHT:- 3.0580 Kg/Mtr.	TOLERANCES:	PARTY NAME:-
DESCRIPTION:- AS PER DRAWING	ANGULARITY:-±1°	(M) No.:-
	straightness:-1.50meter	APPROVED BY:-
SECTION NO:- NP-226-A	TWIST:-1.50mm/meter	SCALE:- 1:1

Global Solutions For Aluminium Extrusions

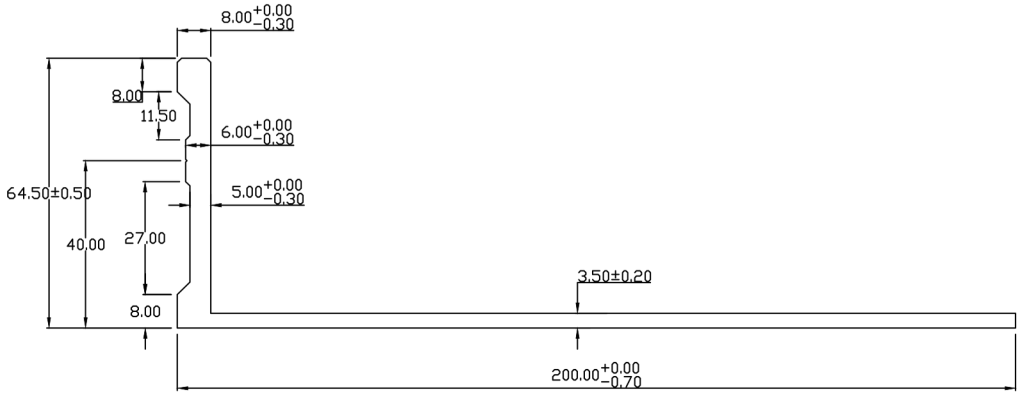

UNSPECIFIED TOLERANCES WILL BE IN ACCORDANCE WITH DIN ISO 2768-1 class Co. Course

Dimension Longitudional	0.5 - 33 - 6 ±0.2	±0.3	6 - 30 ±1° ±0.5	90-120 ±0.8	120-400 ±1.2	400-1000 ±2.0
Minor Dimensions Diameter	0.5 - 33 - 6 ±0.4	±1.0	6 - 30 ±2.0 ±1°	30-120 ±0.8		
Radius	at 10	10-50	50-120	120-400	over 400	

Angle ±30°
Angle ±15°

NOTE:- UNSPECIFIED RADIUS:- 0.30 mm.
NOTE:- ALL DIMENSIONS ARE IN mm.

AREA:- 1061.4100 Sqmm^	ALLOY/TEMPER:- 6061 T6	
EX PERIMETER:- 531.3907 MM	FLATNESS:-±0.7mm^	
WEIGHT:- 2.8658 Kg/Mtr.	TOLERANCES:	
DESCRIPTION:- AS PER DRAWING	ANGULARITY:-±1°	(M) No.:-
PARTY DRG NO:-	straightness:-1.50meter	APPROVED BY:-
SECTION NO:- NP-226	TWIST:-1.50mm/meter	SCALE:- 1:1

Global Solutions For Aluminium Extrusions

Need Zero tolerance for 200 mm

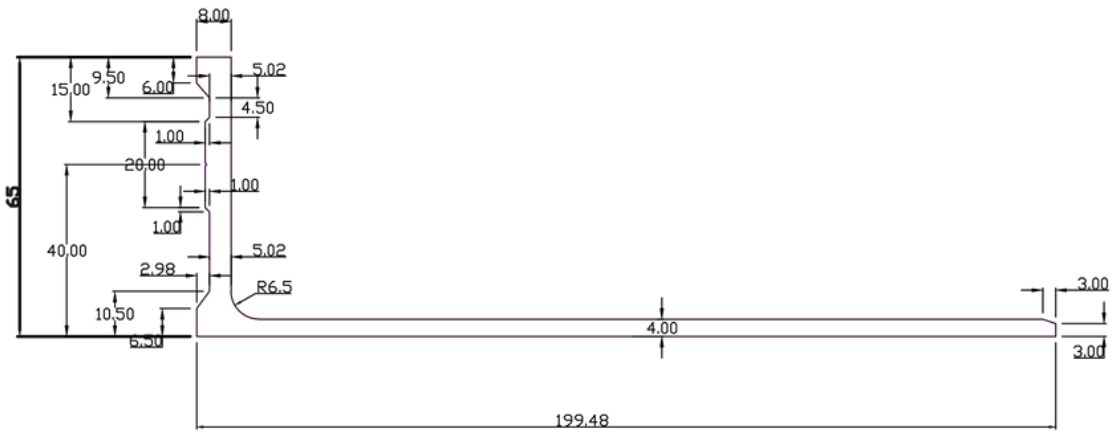

UNSPECIFIED TOLERANCES WILL BE IN ACCORDANCE WITH DIN ISO 2768-1 class C, coarse

Dimension	0.5 - 3	3 - 6	6 - 30	30-120	120-400	400-1000
Longitudional	±0.2	±0.3	±0.5	±0.8	±1.2	±2.0
Mm/Degree	0.5 - 3	3 - 6	6 - 30	30-120		
	±0.4	±1.0	±2.0	±0.8		
Angular	at 10	10-50	50-120	120-400	over 400	
			±1°	±30'		

NOTE:- UNSPECIFIED RADIUS:- 0.30 mm.
NOTE:- ALL DIMENSIONS ARE IN mm.

AREA:- 1168.9012 Sqmm^	ALLOY/TEMPER:- 6061 T6	
EX PERIMETER:- 528.3757 MM	FLATNESS:-±0.7mm^	
WEIGHT:- 3.1560 Kg/Mtr.	TOLERANCES:	
DESCRIPTION:- AS PER DRAWING	ANGULARITY:-±1°	(M) No.:-
PARTY DRG NO:- AX 200	straightness:-1.50meter	APPROVED BY:-
SECTION NO:- NP-171	TWIST:-1.50mm/meter	SCALE:- 1:1

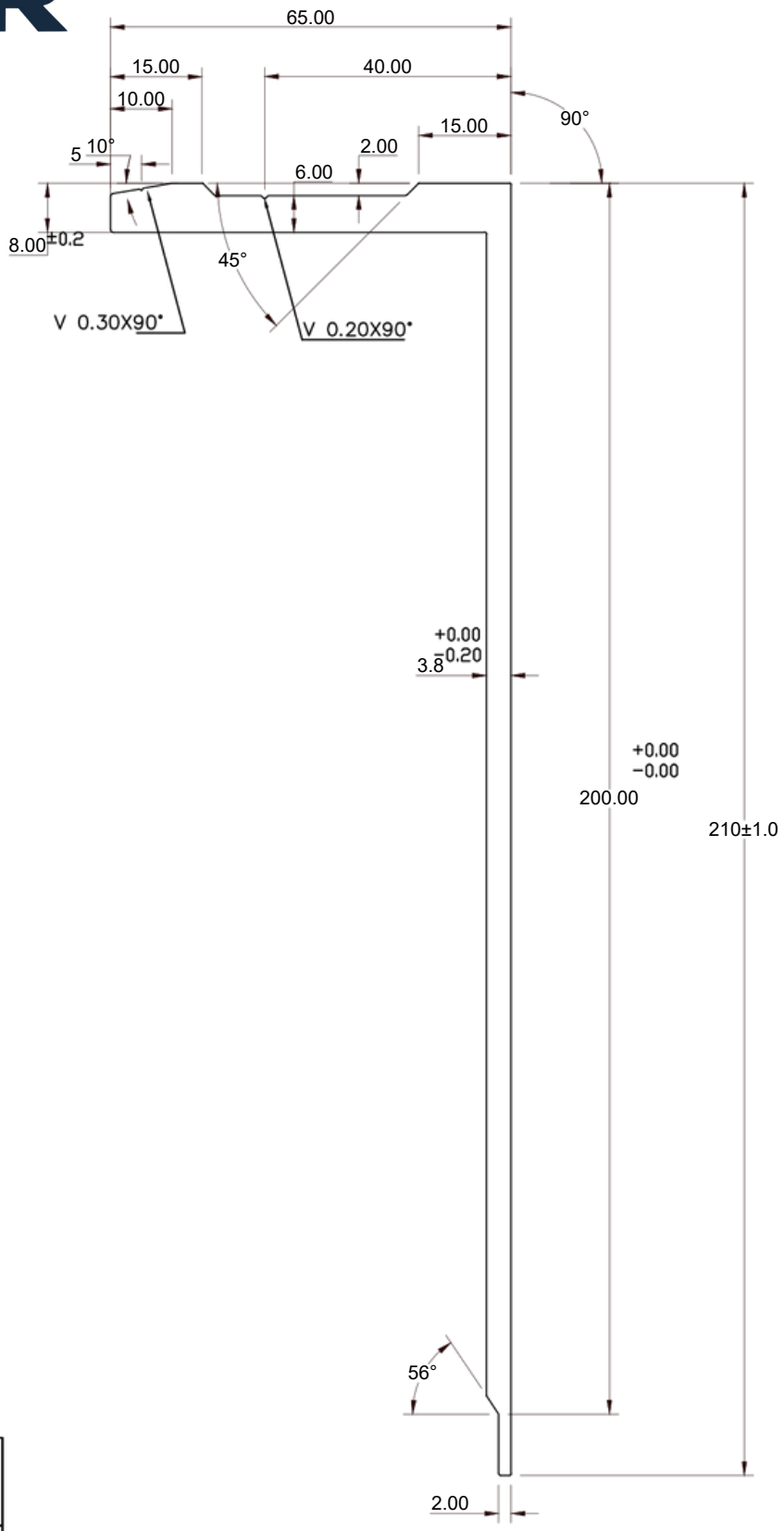

NOTE:- UN-SPECIFIED CORNNER RADIOUS ARE 0.30 mm.
NOTE:- ALL DIMENSIONS ARE IN mm.

UNSPECIFIED TOLERANCES WILL BE IN ACCORDANCE WITH DIN ISO 2768-1 class C = Coarse								
Dimension Longitudional	0.5 - 33 - 6 ±0.2 ±0.4	±0.3	6 - 30 ±0.5	30-120 ±0.8	120-400 ±1.2	400-1000 ±2.0		
Degree Angle Chamfer Radius	0.5 - 33 - 6 ±1.0 at 10		6 - 30 ±2.0	30-120 ±0.8	±0°15°			
		10-50	50-120120-400over 400					

AREA:- 1229.5800 Sqmm^	ALLOY/TEMPER:- 6063 T6	
EX PERIMETER:- 548.6763 MM	FLATNESS:-±0.8mm^	
WEIGHT:- 3.319 Kg/Mtr.	TOLERANCES:	
DESCRIPTION:- L SECTION 65X200	ANGULARITY:-±2°	CHECKED BY:-
	straightness:-1.70meter	APPROVED BY:-
SECTION NO:- N-1705	TWIST:-1.70mm/meter	SCALE:- 1:1

Global Solutions For Aluminium Extrusions

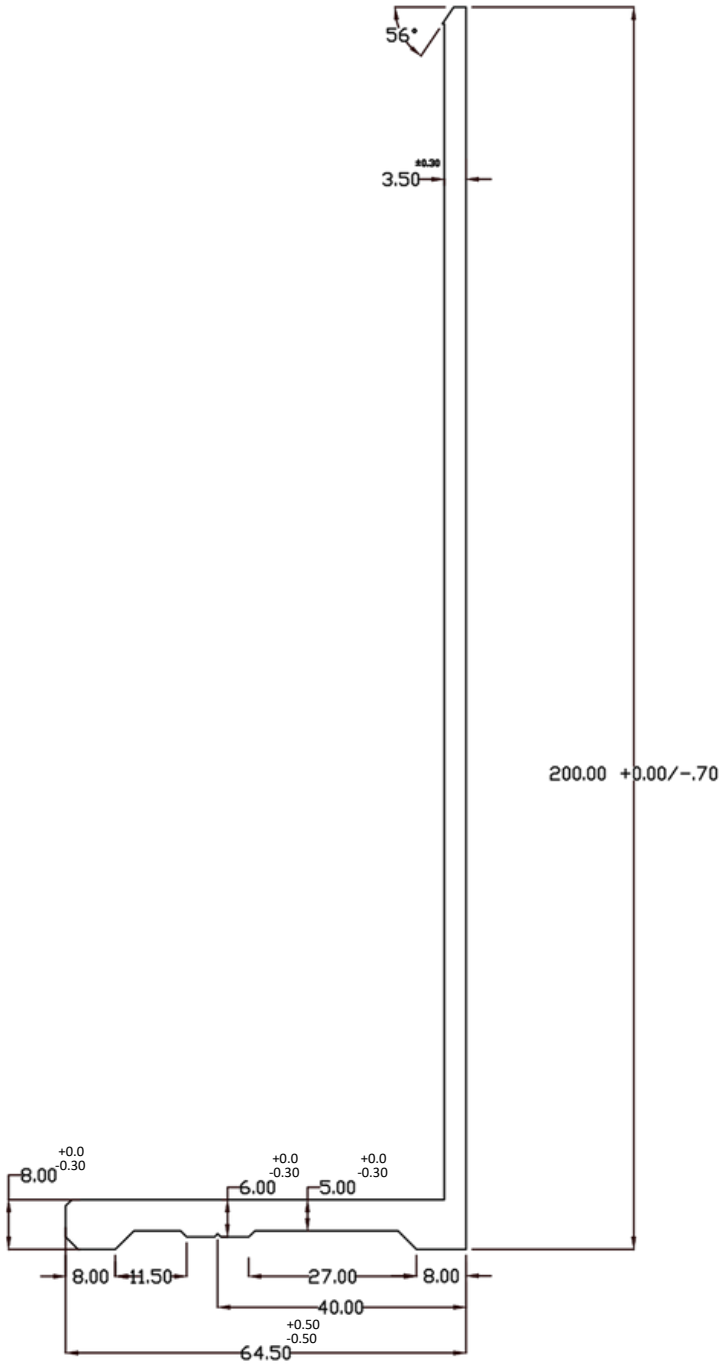

UNSPECIFIED TOLERANCES WILL BE TRACE IN ACCORDANCE WITH DIN ISO 2768-1 class C = Coarse

Dimension	0.5 - 33 - 6	6 - 30	30-120	120-400	400-1000
Longitudional	±0.2	±0.5	±0.8	±1.2	±2.0

Degree & Angular Dimension	0.5 - 33 - 6	6 - 30	30-120	400over 400
	±0.4	±2.0	±0.8	

Radius & Chamfer	10-50	50-120120-400
	±1.0 at 10	

NOTE:- ALL DIMENSIONS ARE IN mm.

NOTE:- WEIGHT + OR - 10%

AREA:- 1058.1446 Sqmm^	ALLOY/TEMPER:- 6061 T6	
EX PERIMETER:- 533.7938 MM	FLATNESS:-±0.8mm^	
WEIGHT:- 10.456 Kg/12'	TOLERANCES:	PARTY NAME:-
DESCRIPTION:	ANGULARITY:-±2°	CHECKED BY:-
PARTY DRG NO:-	straightness:-1.70meter	APPROVED BY:-
SECTION NO:- N-1558	TWIST:-1.70mm/meter	SCALE:- 1:1

Global Solutions For Aluminium Extrusions

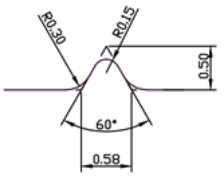

DETAIL:- A

V = V grove 0.50 x 60°

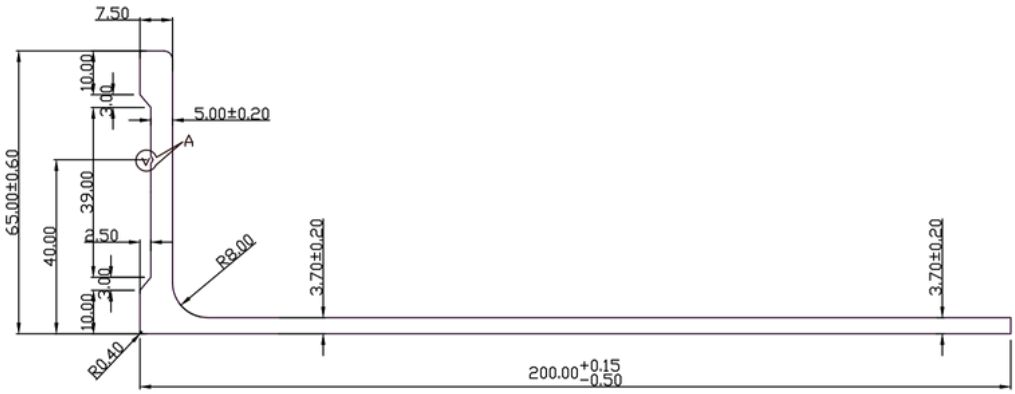

UNSPECIFIED TOLERANCES WELDS ARE IN ACCORDANCE WITH DIN ISO 2768-1 class C - Coarse										
Dimension Longitudional	0.5 - 33 - 6 ±0.2	±0.3	6 - 30 ±0.5	30-90 ±1°	90-120 ±0.8	120-400 ±1.2	400-1000 ±2.0			
Dimension Radius & Diameter	0.5 - 33 - 6 ±0.4	±1.0	6 - 30 ±2.0	30-120 ±1°	30-120 ±0.8					
Mounting Holes	at 10	10-50	50-120	120-400	over 400					

NOTE:- UNSPECIFIED RADIUS:- 0.30 mm.
NOTE:- ALL DIMENSIONS ARE IN mm.

AREA:- 1107.1244 Sqmm^	ALLOY/TEMPER:- 6061 T6	
EX PERIMETER:- 527.4428 MM	FLATNESS:-±0.7mm^	
WEIGHT:- 2.9892 Kg/Mtr.	TOLERANCES:	
DESCRIPTION:- AS PER DRAWING	ANGULARITY:-±1°	(M) No.:-
PARTY DRG NO:- 1137	straightness:-1.00meter	APPROVED BY:-
SECTION NO:- NP-327	TWIST:-1.00mm/meter	SCALE:- 1:1

Global Solutions For Aluminium Extrusions

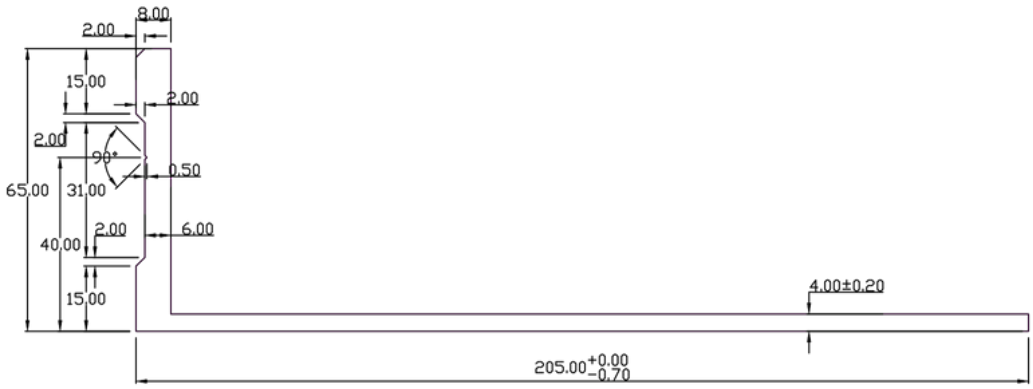

UNSPECIFIED TOLERANCES WELDED IN ACCORDANCE WITH DIN ISO 2768-1 class C - Coarse							
Dimension Longitudional	0.5 - 33 - 6 ±0.2	6 - 30 ±0.5	30-90-120 ±0.8	120-400 ±1.2	400-1000 ±2.0		
Dimension Radius & Diameter	0.5 - 33 - 6 ±0.4	6 - 30 ±2.0	30-120 ±0.8				
Angle	at 10	±1°	±0.8				
	10-50	50-120	120-400	over 400			
	±1.0	±30'	±15'				

NOTE:- UNSPECIFIED RADIUS:- 0.30 mm.
NOTE:- ALL DIMENSIONS ARE IN mm.

AREA:- 1239.7500 Sqmm^	ALLOY/TEMPER:- 6061 T6	
EX PERIMETER:- 540.8995 MM	FLATNESS:-±0.7mm^	
WEIGHT:- 3.3473 Kg/Mtr.	TOLERANCES:	PARTY NAME:-
DESCRIPTION:- AS PER DRAWING	ANGULARITY:-±1°	(M) No.:-
PARTY DRG NO:-	straightness:-1.50meter	APPROVED BY:-
SECTION NO:- NP-319	TWIST:-1.50mm/meter	SCALE:- 1:1

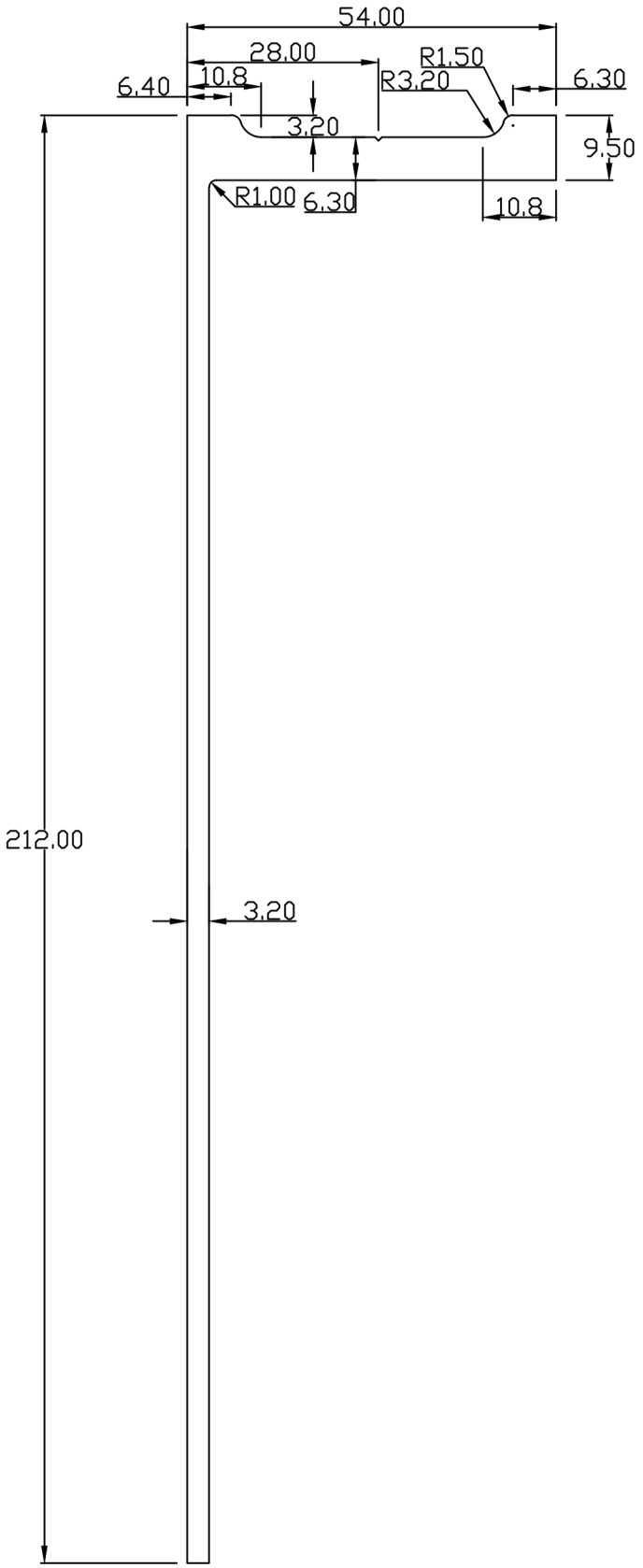

WITH DIN ISO 2768-1 class C = Coarse						
Dimension Longitudional	0.5 - 33 - 6 ±0.2	±0.3	6 - 30 ±0.5	30-120 ±0.8	120-400 ±1.2	
Degree radius Chamfer	0.5 - 33 - 6 ±0.4	±1.0	6 - 30 ±2.0	30-120 ±0.8	±0°15°	
	at 10	10-50	50-120120-400over 400			

NOTE:- ALL DIMENSIONS ARE IN mm.

AREA:- 1040.6750 Sqmm^	ALLOY/TEMPER:- 6061 T6	
EX PERIMETER:- 534.7887 MM	FLATNESS:-±1.0mm^	DATE:-
WEIGHT:- 2.8098 Kg/Mtr.	TOLERANCES:	PARTY NAME:-
DESCRIPTION:-	ANGULARITY:-±1.0°	(M) No.:-
PARTY DRG. No.:- 200mm L SECTION	straightness:-1.00mm/meter	APPROVED BY:-
SECTION NO:- NP-224	TWIST:-1.00mm/meter	SCALE:- 1:1

Global Solutions For Aluminium Extrusions

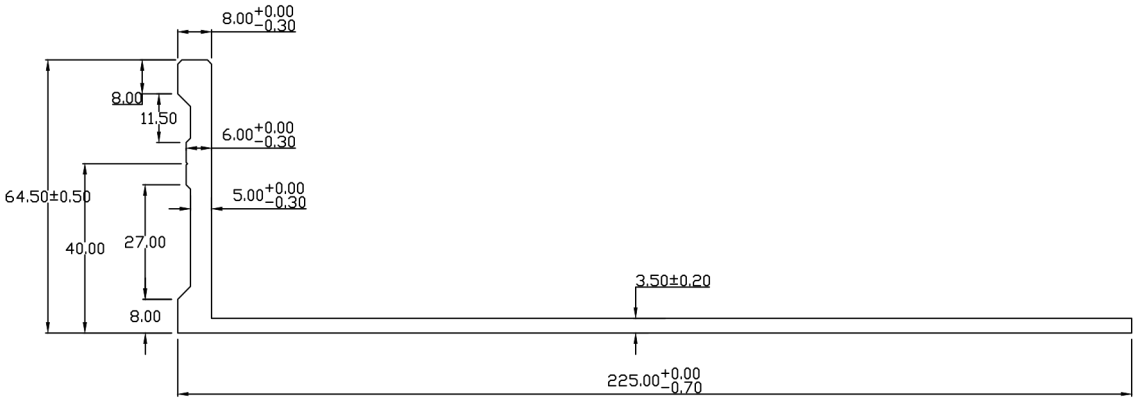

NOTE:- UNSPECIFIED RADIUS:- 0.30 mm.
NOTE:- ALL DIMENSIONS ARE IN mm.

UNSPECIFIED TOLERANCE	WITHIN ISO 2768-1 (Fine Class) UNSPECIFIED TOLERANCE WILL BE IN ACCORDANCE										
Dimension Longitudional	0.5 - 33 - 6 ±0.2 ±0.4	±0.3	6 - 30 ±0.5 ±1° ±0.3	30-120 ±0.8	120-400 ±1.2	400-1000 ±2.0					
Mm Dimension for Bending	0.5 - 33 - 6 ±1.0 at 10	10-50	6 - 30 ±2.0 ±1°	30-120 ±0.8	over 400						

AREA:- 1148.9100 Sqmm^	ALLOY/TEMPER:- 6061 T6	
EX PERIMETER:- 581.3907 MM	FLATNESS:-±0.7mm^	
WEIGHT:- 3.1020 Kg/Mtr.	TOLERANCES:	
DESCRIPTION:- AS PER DRAWING	ANGULARITY:-±1°	(M) No.:-
PARTY DRG NO:-	straightness:-1.50meter	APPROVED BY:-
SECTION NO:- NP-227	TWIST:-1.50mm/meter	SCALE:- 1:1

Global Solutions For Aluminium Extrusions

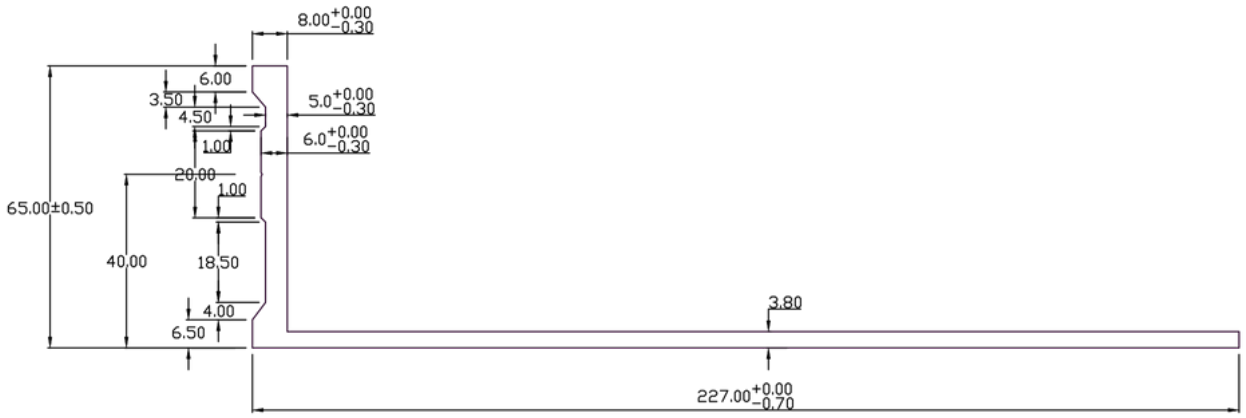

UNSPECIFIED TOLERANCES WILL BE IN ACCORDANCE WITH DIN ISO 2768-1 class C or Coarse										
Dimension Longitudional	0.5 - 33 - 6 ±0.2	±0.3	6 - 30 ±0.5	30-120 ±0.8	120-400 ±1.2	400-1000 ±2.0				
Dimension Transverse	0.5 - 33 - 6 ±1.4		6 - 30 ±2.0	30-120 ±0.8						
Mounting Holes	±1.0 at 10									
		10-50	50-120	120-400	over 400					

±30°
±15°

NOTE:- UNSPECIFIED RADIUS:- 0.30 mm.
NOTE:- ALL DIMENSIONS ARE IN mm.

AREA:- 1227.6143 Sqmm^	ALLOY/TEMPER:- 6061 T6	
EX PERIMETER:- 587.0432 MM	FLATNESS:-±0.7mm^	
WEIGHT:- 3.3145 Kg/Mtr.	TOLERANCES:	PARTY NAME:-
DESCRIPTION:- AS PER DRAWING	ANGULARITY:-±1°	(M) No.:-
PARTY DRG NO:- AX-225	straightness:-1.50meter	APPROVED BY:-
SECTION NO:- NP-293	TWIST:-1.50mm/meter	SCALE:- 1:1

Global Solutions For Aluminium Extrusions

Need Zero tolerance for 225 mm (positive is ok but in no case negative)

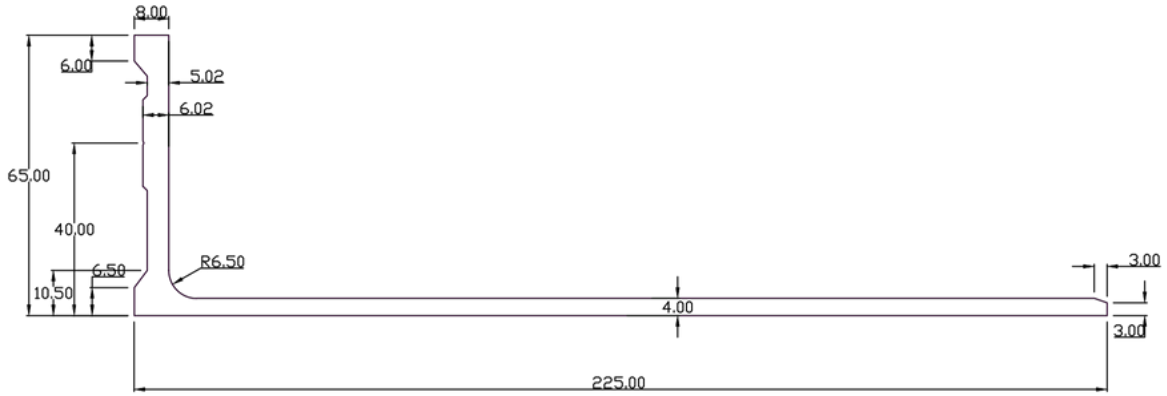

UNSPECIFIED TOLERANCES WILL BE TREATED ACCORDANCE WITH DIN ISO 2768-1 class C + Cover

Dimension Longitudional	0.5 - 33 - 6 ±0.2	±0.3	6 - 30 ±0.5	30-120 ±0.8	120-400 ±1.2	400-1000 ±2.0
Mm/Mm Perpendicular/Angular	0.5 - 33 - 6 ±0.4		6 - 30 ±2.0	30-120 ±0.8		
	±1.0 at 10	10-50	120120-400	over 400		

±30°
±15°

NOTE:- UNSPECIFIED RADIUS:- 0.30 mm.
NOTE:- ALL DIMENSIONS ARE IN mm.

AREA:- 1270.9012 Sqmm^	ALLOY/TEMPER:- 6061 T6	
EX PERIMETER:- 579.3757 MM	FLATNESS:-±0.7mm^	
WEIGHT:- 3.4143 Kg/Mtr.	TOLERANCES:	PARTY NAME:- DAN
DESCRIPTION:- AS PER DRAWING	ANGULARITY:-±1°	(M) No.:-
PARTY DRG NO:- AX-225	straightness:-1.50meter	APPROVED BY:-
SECTION NO:- NP-163	TWIST:-1.50mm/meter	SCALE:- 1:1

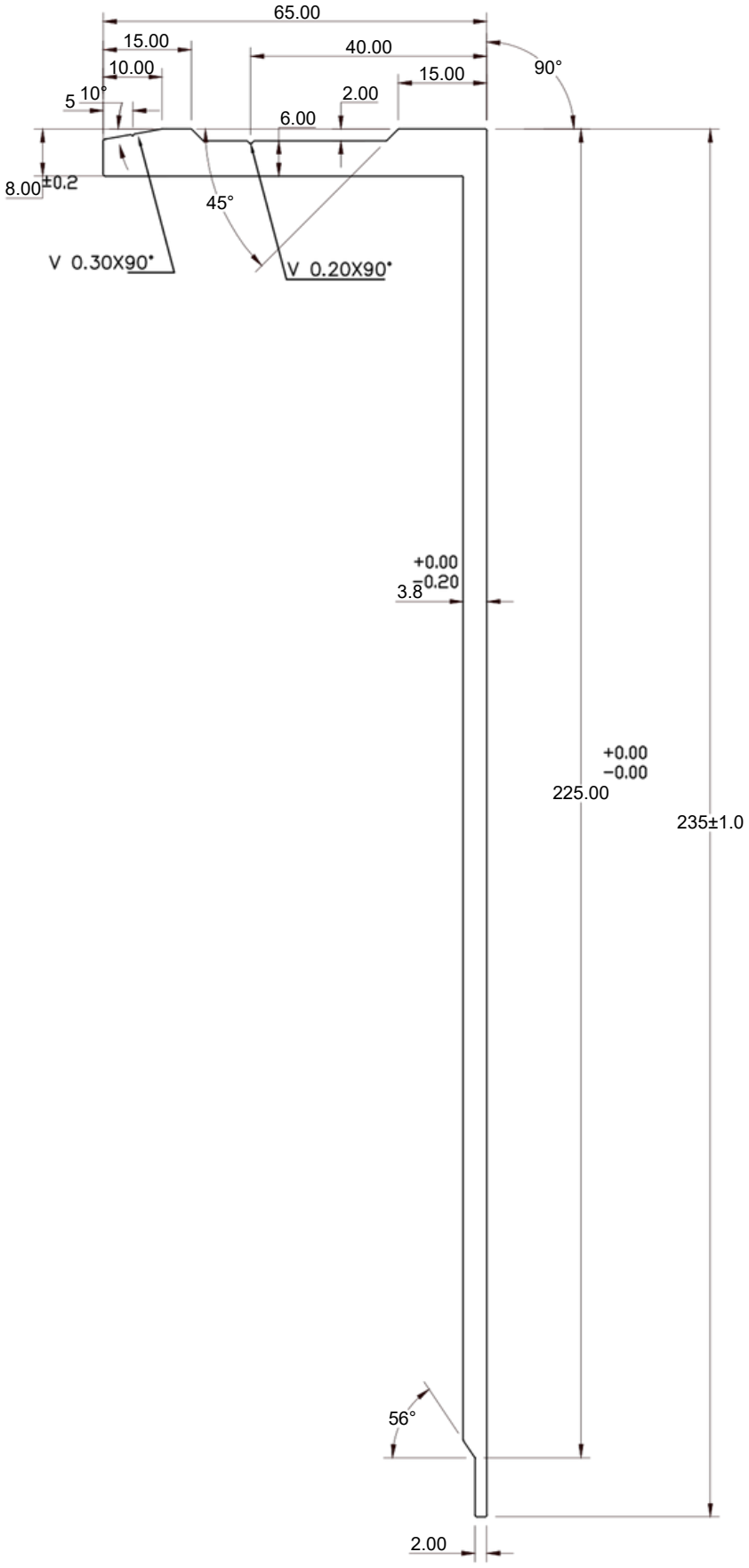

NOTE:- UN-SPECIFIED CORNNER RADIOUS ARE 0.30 mm.
NOTE:- ALL DIMENSIONS ARE IN mm.

UNSPECIFIED TOLERANCES WILL BE IN ACCORDANCE WITH DIN ISO 2768-1 CLASS C= COARSE

Dimension	0.5 - 33 - 6	6 - 30	30-120	120-400	400-1000
Longitudional	±0.2 ±0.4	±0.3	±0.5	±0.8	±1.2	±2.0
Degree angle & chamfer	0.5 - 33 - 6		6 - 30	30-120	120-400	±0°15°
	±1.0 at 10	10-50	50-120	120-400	over 400	

AREA:- 1329.5827 Sqmm^	ALLOY/TEMPER:- 6063 T6	
EX PERIMETER:- 603.4163 MM	FLATNESS:-±0.8mm^	
WEIGHT:- 3.590 Kg/Mtr.	TOLERANCES:	
DESCRIPTION:- L SECTION 65X225	ANGULARITY:-±2°	CHECKED BY:-
PARTY DRG NO:-MCE/AFW/L SECTION/225	straightness:-1.70meter	APPROVED BY:-
SECTION NO:- N-1706	TWIST:-1.70mm/meter	SCALE:- 1:1

Global Solutions For Aluminium Extrusions

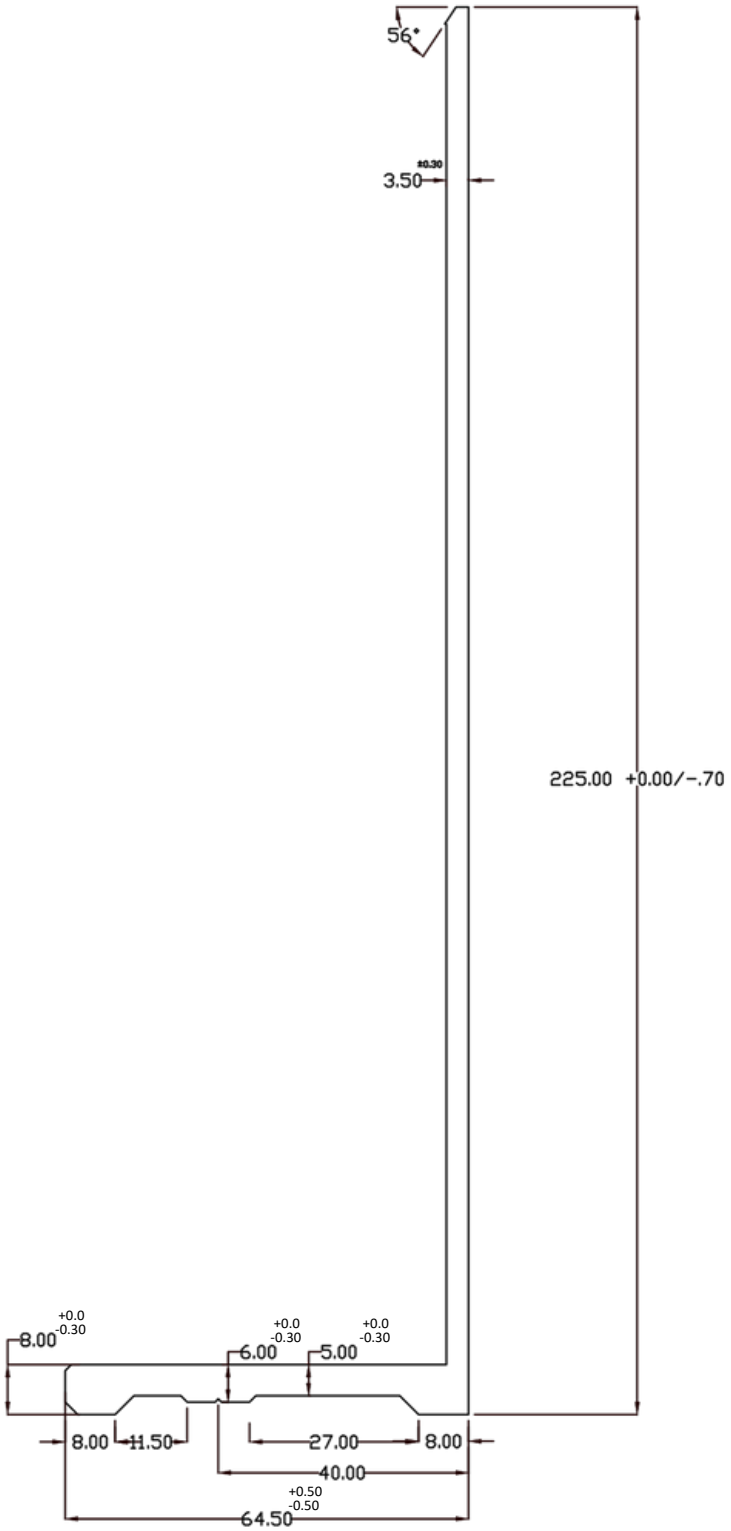

UNSPECIFIED TOLERANCES WILL BE IN ACCORDANCE WITH DIN ISO 2768-1 class C = COARSE

Dimension	0.5 - 3	3 - 6	6 - 30	30-120	120-400	400-1000
Longitudional	±0.4	±0.3	±0.5	±0.8	±1.2	±2.0

Degree of Chamfer & Radius	0.5 - 3	3 - 6	6 - 30	30-120	120-400
Minutes	±0.2	±0.4	±2.0	±0.8	
Degrees	0.5 - 3	3 - 6	6 - 30	30-120	400over 400
	±1.0				
	at 10	10-50	50-120120-400		

NOTE:- ALL DIMENSIONS ARE IN mm.

NOTE:- WEIGHT + OR - 10%

AREA:- 1145.6446 Sqmm^	ALLOY/TEMPER:- 6061 T6	
EX PERIMETER:- 583.7938 MM	FLATNESS:-±0.8mm^	
WEIGHT:- 11.321 Kg/12'	TOLERANCES:	PARTY NAME:-
DESCRIPTION:	ANGULARITY:-±2°	CHECKED BY:-
PARTY DRG NO:-	straightness:-1.70meter	APPROVED BY:-
SECTION NO:- N-1557	TWIST:-1.70mm/meter	SCALE:- 1:1

Global Solutions For Aluminium Extrusions

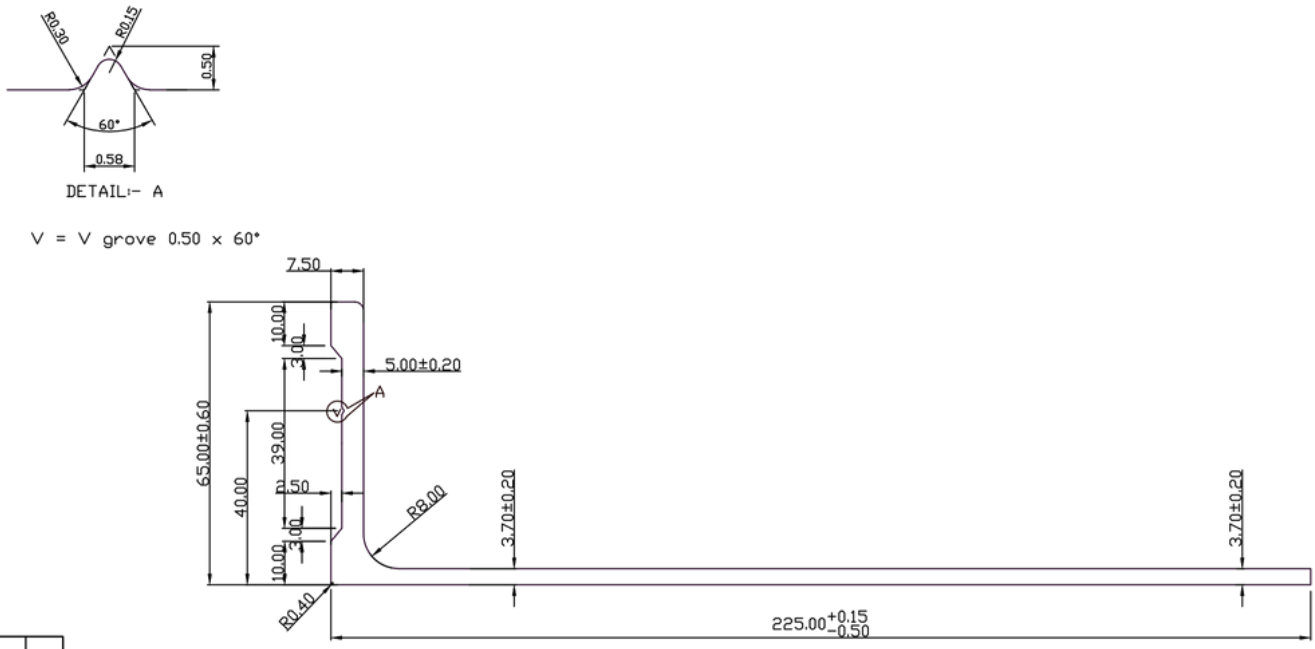

UNSPECIFIED TOLERANCES WELDS WITH DIN ISO 2768-1 class C - Coarse IN ACCORDANCE								
Dimension Longitudional	0.5 - 33 - 6 ±0.2	±0.3	6 - 30 ±0.5	30-90-120 ±0.8	120-400 ±1.2	400-1000 ±2.0		
Dimension Radius and angle	0.5 - 33 - 6 ±0.4	±1.0	6 - 30 ±2.0	30-120 ±0.8				
Machining Tolerances	at 10	10-50	50-120	120-400	over 400			

±30°
±15°

NOTE:- UNSPECIFIED RADIUS:- 0.30 mm.
NOTE:- ALL DIMENSIONS ARE IN mm.

AREA:- 1199.6244 Sqmm^	ALLOY/TEMPER:- 6061 T6	
EX PERIMETER:- 577.4428 MM	FLATNESS:-±0.7mm^	
WEIGHT:- 3.2389 Kg/Mtr.	TOLERANCES:	
DESCRIPTION:- AS PER DRAWING	ANGULARITY:-±1°	(M) No.:-
PARTY DRG NO:- 1138	straightness:-1.00meter	APPROVED BY:-
SECTION NO:- NP-328	TWIST:-1.00mm/meter	SCALE:- 1:1

Global Solutions For Aluminium Extrusions

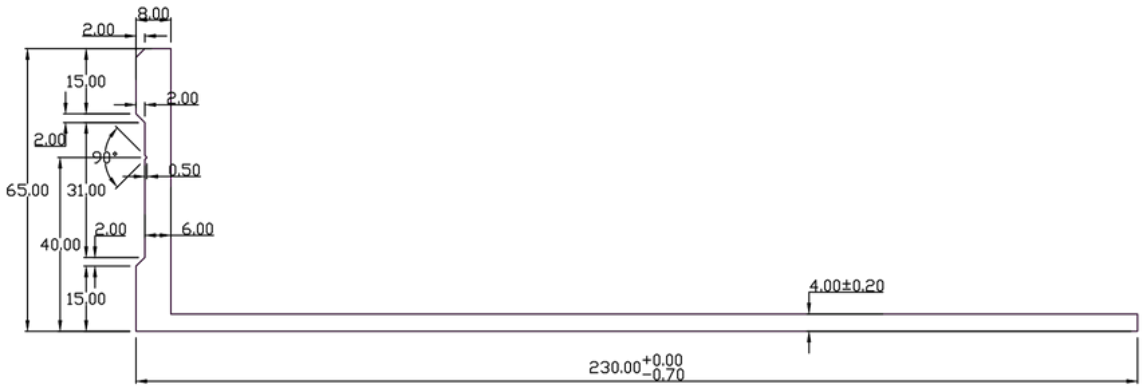

UNSPECIFIED TOLERANCES WELDED IN ACCORDANCE WITH DIN ISO 2768-1 class C - Coarse

Dimension Longitudional	0.5 - 33 - 6 ±0.2	6 - 30 ±1° ±0.5	30-90-120 ±0.8	120-400 ±1.2	400-1000 ±2.0
Angularity	0.5 - 33 - 6 ±0.4	6 - 30 ±1° ±2.0	30-120 ±0.8		
Radius & Diameter	at 10	10-50 ±1.0	50-120	120-400	over 400

±30°
±15°

NOTE:- UNSPECIFIED RADIUS:- 0.30 mm.
NOTE:- ALL DIMENSIONS ARE IN mm.

AREA:- 1339.7500 Sqmm^	ALLOY/TEMPER:- 6061 T6	
EX PERIMETER:- 590.8995 MM	FLATNESS:-±0.7mm^	
WEIGHT:- 3.6173 Kg/Mtr.	TOLERANCES:	PARTY NAME:-
DESCRIPTION:- AS PER DRAWING	ANGULARITY:-±1°	(M) No.:-
PARTY DRG NO:-	straightness:-1.50meter	APPROVED BY:-
SECTION NO:- NP-318	TWIST:-1.50mm/meter	SCALE:- 1:1

Global Solutions For Aluminium Extrusions

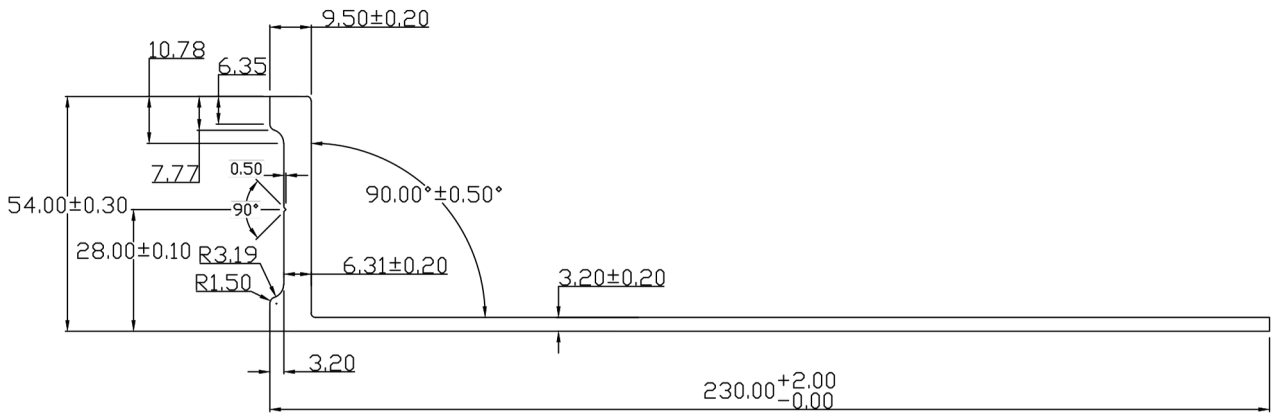

UNSPECIFIED TOLERANCES WITH DIN ISO 2768-1 class C Coarse

Dimension Longitudional	0.5 - 33 - 6 ±0.2 ±0.4	±0.3	6 - 30 ±0.5 ±1°	30-120 ±0.8	120-400 ±1.2	400-1000 ±2.0
Radius/Diameter	0.5 - 33 - 6 ±1.0 at 10		6 - 30 ±2.0 ±1°	30-120 ±0.8		
Mitre	±1.0 at 10	10-505	120-400	over 400		

±30'
±15'

NOTE:- UNSPECIFIED RADIUS:- 0.30 mm.
NOTE:- ALL DIMENSIONS ARE IN mm.

AREA:- 1098.2368 Sqmm^	ALLOY/TEMPER:- 6061 T6	
EX PERIMETER:- 570.3550 MM	FLATNESS:-±0.7mm^	
WEIGHT:- 2.965 Kg/Mtr.	TOLERANCES:	
DESCRIPTION:- AS PER DRAWING	ANGULARITY:-±1°	(M) No.:-
PARTY DRG NO:- 230 X 54 ANGLE	straightness:-1.50meter	APPROVED BY:-
SECTION NO:- NP-263	TWIST:-1.50mm/meter	SCALE:- 1:1

Global Solutions For Aluminium Extrusions

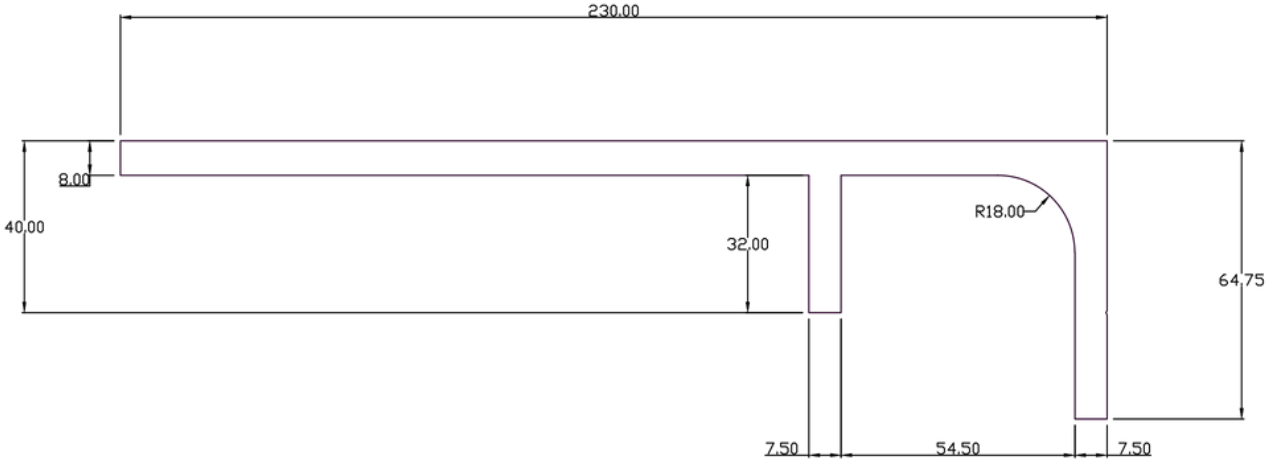

UNSPECIFIED TOLERANCES WILL BE IN ACCORDANCE WITH ISO 2768-1 CLASS C

Dimension	0.5 - 33 - 6	6 - 30	30-120	120-400	400-1000
Longitudional	±0.2	±0.5	±0.8	±1.2	±2.0
Thickness	0.5 - 33 - 6	6 - 30	30-120		
Mouldings	±1.0 at 10	±2.0 ±1%	±0.8		
Radius	10-50	50-120	120-400	over 400	
	±0.3	±0.5	±0.8	±1.2	±2.0

±30°
±15°

NOTE:- UNSPECIFIED RADIUS:- 0.30 mm.
NOTE:- ALL DIMENSIONS ARE IN mm.

AREA:- 2575.0310 Sqmm^	ALLOY/TEMPER:- 6061 T6	
EX PERIMETER:- 645.8924 MM	FLATNESS:-±0.7mm^	
WEIGHT:- 6.9525 Kg/Mtr.	TOLERANCES:	
DESCRIPTION:- AS PER DRAWING	ANGULARITY:-±1°	(M) No.:-
PARTY DRG NO:- WRCX	straightness:-1.50meter	APPROVED BY:-
SECTION NO:- NP-177	TWIST:-1.50mm/meter	SCALE:- 1:1

Global Solutions For Aluminium Extrusions

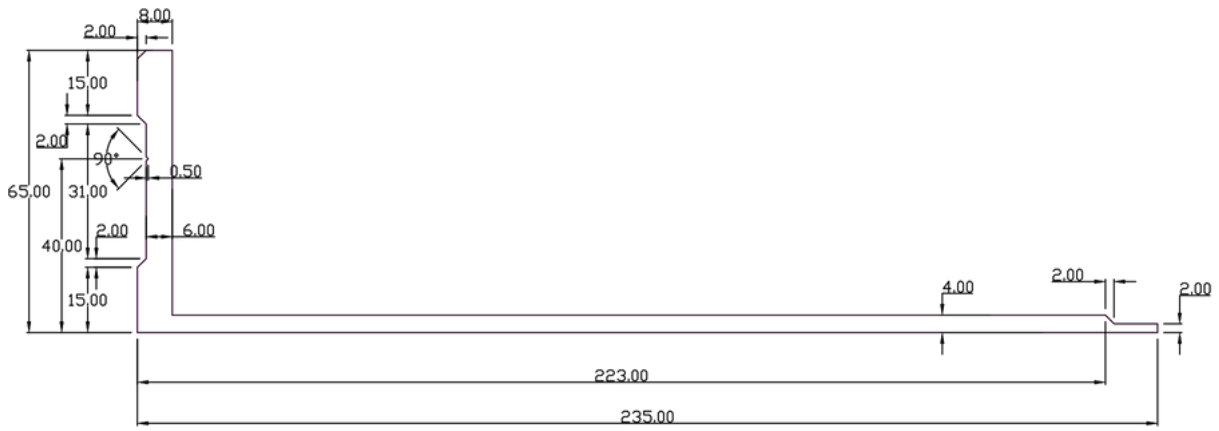

UNSPECIFIED TOLERANCES WILL BE IN ACCORDANCE WITH DIN ISO 2768-1 class C or Coarse

Dimension Longitudional	0.5 - 33 - 6 ±0.2 ±0.4	±0.3	6 - 30 ±1° ±0.5	90-120 ±0.8	120-400 ±1.2	400-1000 ±2.0
Angularity	0.5 - 33 - 6 ±1°		6 - 30 ±2.0 ±1°	30-120 ±0.8		
Radius	±1.0 ±10	10-50	50-120	120-400	over 400	

NOTE:- UNSPECIFIED RADIUS:- 0.30 mm.
NOTE:- ALL DIMENSIONS ARE IN mm.

AREA:- 1337.7500 Sqmm^	ALLOY/TEMPER:- 6061 T6	
EX PERIMETER:- 599.7279 MM	FLATNESS:-±0.7mm^	
WEIGHT:- 3.6119 Kg/Mtr.	TOLERANCES:	PARTY NAME:-
DESCRIPTION:- AS PER DRAWING	ANGULARITY:-±1°	(M) No.:-
PARTY DRG NO:- L SECTION-225	straightness:-1.50meter	APPROVED BY:-
SECTION NO:- NP-295	TWIST:-1.50mm/meter	SCALE:- 1:1

Global Solutions For Aluminium Extrusions

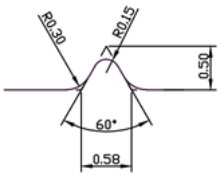

DETAIL:- A

V = V grove 0.50 x 60°

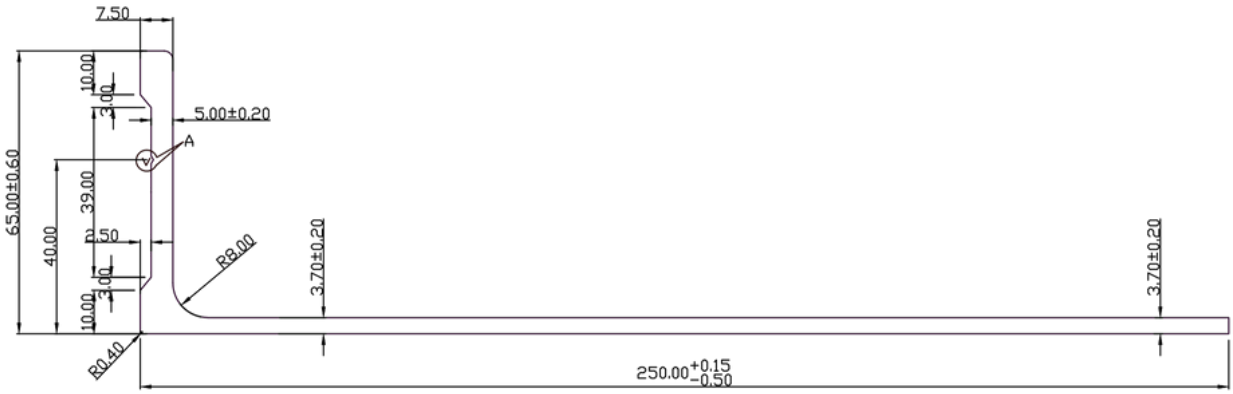

UNSPECIFIED TOLERANCES WELDE WITH DIN ISO 2768-1 class C - Coarse IN ACCORDANCE							
Dimension Longitudional	0.5 - 33 - 6 ±0.2	±0.3	6 - 30 ±0.5	30-90-120 ±0.8	120-400 ±1.2	400-1000 ±2.0	
Dimension Radius & Angular	0.5 - 33 - 6 ±0.4	±1.0	6 - 30 ±2.0	30-120 ±0.8			
Machining Tolerances	at 10	10-50	50-120	120-400	over 400		

±30°
±15°

NOTE:- UNSPECIFIED RADIUS:- 0.30 mm.
NOTE:- ALL DIMENSIONS ARE IN mm.

AREA:- 1292.1244 Sqmm^	ALLOY/TEMPER:- 6061 T6	
EX PERIMETER:- 627.4428 MM	FLATNESS:-±0.7mm^	
WEIGHT:- 3.4887 Kg/Mtr.	TOLERANCES:	
DESCRIPTION:- AS PER DRAWING	ANGULARITY:-±1°	(M) No.:-
PARTY DRG NO:- 1139	straightness:-1.00meter	APPROVED BY:-
SECTION NO:- NP-329	TWIST:-1.00mm/meter	SCALE:- 1:1

Global Solutions For Aluminium Extrusions

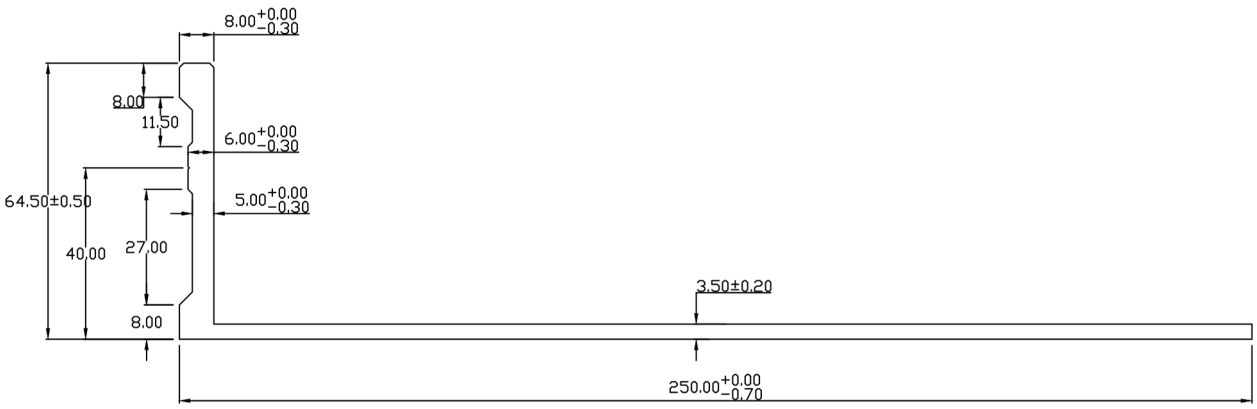

UNSPECIFIED TOLERANCES WILL BE IN ACCORDANCE WITH DIN ISO 2768-1 class C or Coarse

Dimension	0.5 - 3	3 - 6	6 - 30	30-120	120-400	400-1000
Longitudional	±0.2	±0.4	±0.3	±0.5	±0.8	±1.2 ±2.0
Minimum Radius for Bending	0.5 - 33	33 - 4		6 - 30	30-120	
	±1.0 at 10			±2.0	±0.8	
			10-50	50-120	120-400	over 400

NOTE:- UNSPECIFIED RADIUS:- 0.30 mm.
NOTE:- ALL DIMENSIONS ARE IN mm.

AREA:- 1236.4100 Sqmm^	ALLOY/TEMPER:- 6061 T6	
EX PERIMETER:- 631.3907 MM	FLATNESS:-±0.7mm^	
WEIGHT:- 3.3383 Kg/Mtr.	TOLERANCES:	
DESCRIPTION:- AS PER DRAWING	ANGULARITY:-±1°	(M) No.:-
PARTY DRG NO:-	straightness:-1.50meter	APPROVED BY:-
SECTION NO:- NP-228	TWIST:-1.50mm/meter	SCALE:- 1:1

UNSPECIFIED TOLERANCES WILL BE IN ACCORDANCE WITH DIN ISO 2768-1 class C - coarse								
Dimension Longitudional	0.5 - 33 - 6 ±0.2	±0.3	6 - 30 ±0.5	30-120 ±0.8	120-400 ±1.2	400-1000 ±2.0		
Degrees	0.5 - 33 - 6 ±0.4		6 - 30 ±2.0	30-120 ±0.8	±0°15°			
Radius Chamfer		10-50 ±1.0 at 10	50-120120-400over 400					

NOTE:- UN-SPECIFIED CORNNER RADIOUS ARE 0.30 mm.
NOTE:- ALL DIMENSIONS ARE IN mm.

AREA:- 1429.5827 Sqmm^	ALLOY/TEMPER:- 6063 T6	
EX PERIMETER:- 643.4394 MM	FLATNESS:-±0.8mm^	
WEIGHT:- 3.860 Kg/Mtr.	TOLERANCES:	PARTY NAME:-
DESCRIPTION:- L SECTION 65X250	ANGULARITY:-±2°	CHECKED BY:-
	straightness:-1.70meter	APPROVED BY:-
SECTION NO:- N-1707	TWIST:-1.70mm/meter	SCALE:- 1:1

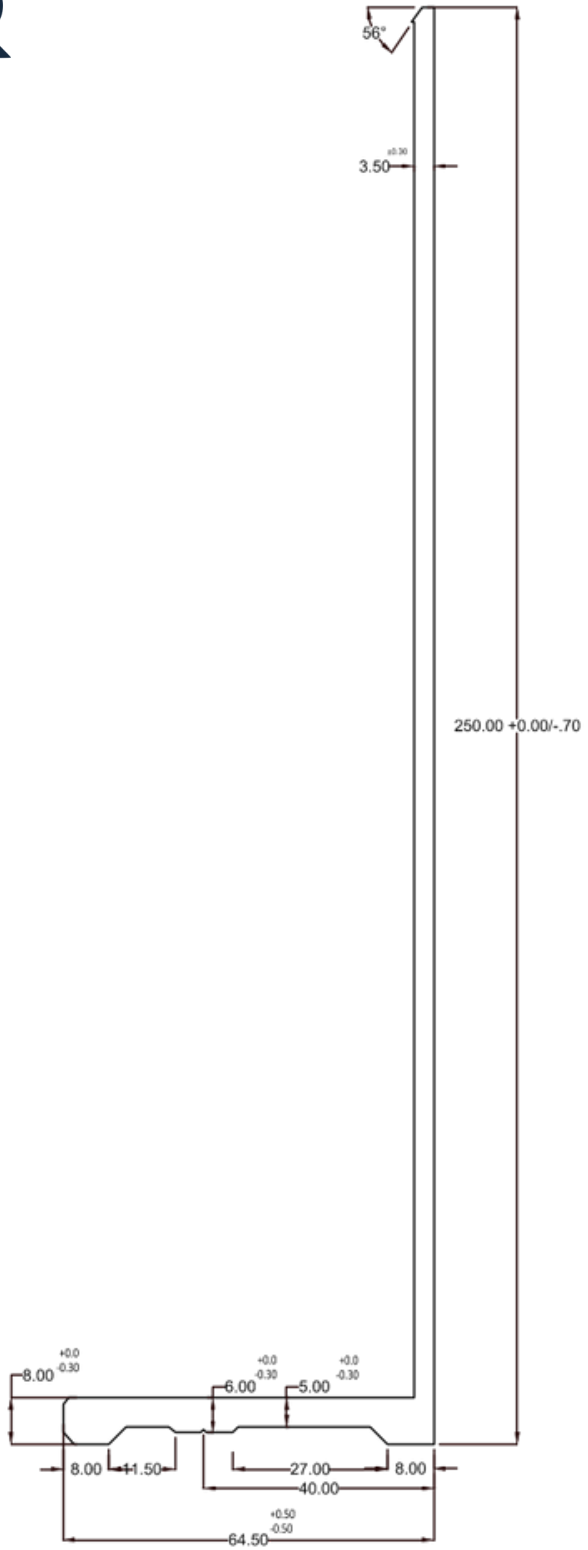

UNSPECIFIED TOLERANCES WILL BE IN ACCORDANCE WITH DIN ISO 2768-1 CLASS C = COARSE

DIMENSION LONGITUDIONAL	0.5 - 3 ±0.2	3 - 6 ±0.3	6 - 30 ±0.5	30-120 ±0.8	120-400 ±1.2	400-1000 ±2.0	
CHAMFER & RADIUS	0.5 - 3 ±0.4	3 - 6 ±1.0	6 - 30 ±2.0	30-120 ±0.8			
DEGREES & MINUTES	AT 10	10-50	50-120	120-400	OVER 400		

NOTE:- ALL DIMENSIONS ARE IN MM.

AREA:- 1233.1446 SQMM²	ALLOY/TEMPER:- 6063 T6	DRAWN BY:-
EX PERIMETER:- 633.7938 MM	FLATNESS:-±0.8MM²	DATE:-
WEIGHT:- 12.185 KG/12'	TOLERANCES:	PARTY NAME:-
DESCRIPTION:	ANGULARITY:-±2°	CHECKED BY:-
PARTY DRG NO:-	STRAIGHTNESS:-1.70METER	APPROVED BY:-
SECTION NO:- N-1354	TWIST:-1.70MM/METER	SCALE:- 1:1

Global Solutions For Aluminium Extrusions

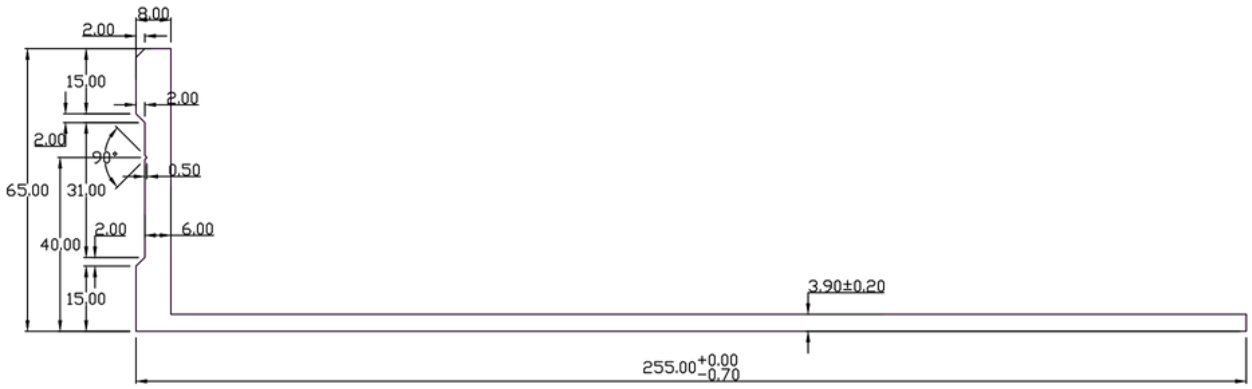

UNSPECIFIED TOLERANCES WELDED IN ACCORDANCE WITH DIN ISO 2768-1 class C - Coarse

Dimension Longitudional	0.5 - 33 - 6 ±0.2	6 - 30 ±0.5	30-90-120 ±0.8	120-400 ±1.2	400-1000 ±2.0
Radius & Diameter	0.5 - 33 - 6 ±0.4	6 - 30 ±2.0	30-120 ±0.8		
Angle	at 10	±1°	±0.8		
Machining	10-505	1-120120-400	over 400		

±30°
±15°

NOTE:- UNSPECIFIED RADIUS:- 0.30 mm.
NOTE:- ALL DIMENSIONS ARE IN mm.

AREA:- 1415.0500 Sqmm^	ALLOY/TEMPER:- 6061 T6	
EX PERIMETER:- 640.8995 MM	FLATNESS:-±0.7mm^	
WEIGHT:- 3.8206 Kg/Mtr.	TOLERANCES:	PARTY NAME:-
DESCRIPTION:- AS PER DRAWING	ANGULARITY:-±1°	(M) No.:-
PARTY DRG NO:-	straightness:-1.50meter	APPROVED BY:-
SECTION NO:- NP-316	TWIST:-1.50mm/meter	SCALE:- 1:1

Global Solutions For Aluminium Extrusions

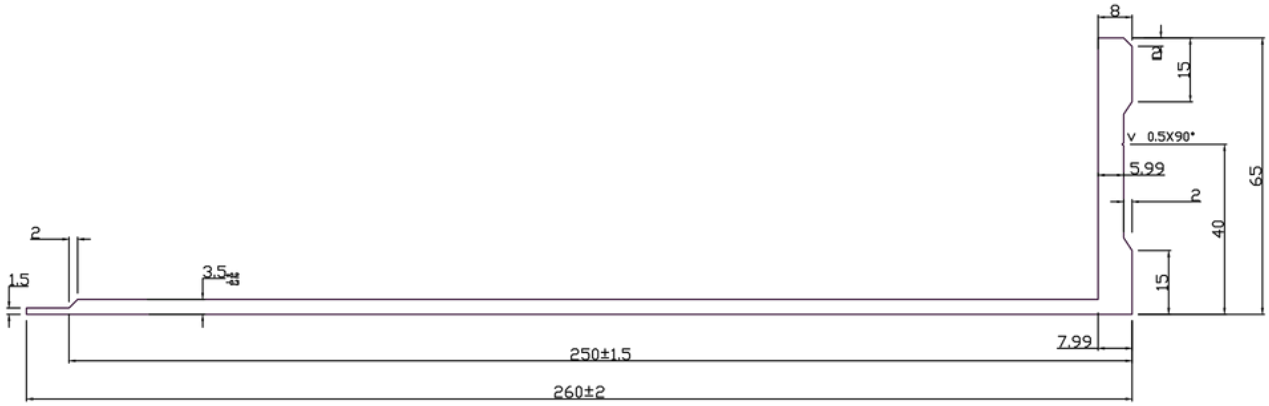

Dimension	0.5 - 33 - 6	6 - 30	30-120	120-400	400-1000
Longitudional	±0.2 ±0.4	±0.3	±0.5 ±1°	±0.8	±1.2	±2.0
Mandrel Drawn Tube	0.5 - 33 - 6		6 - 30 ±2.0 ±1°	30-120 ±0.8		
Drawn Hollow Square Tube	±1.0 a110	10-50	50-120	120-400	over 400

UNSPECIFIED TOLERANCES ARE AS PER CUSTOMER DRAWING
SPECIFIED TOLERANCES ARE IN ACCORDANCE

NOTE:- ALL DIMENSIONS ARE IN mm.

AREA:- 1312.6697 Sqmm^	ALLOY/TEMPER:- 6061 T6	
EX PERIMETER:- 659.1715 MM	FLATNESS:-±0.7mm^	
WEIGHT:- 3.544 Kg/Mtr.	TOLERANCES:	
DESCRIPTION:- AS PER DRAWING	ANGULARITY:-±1°	CHECKED BY:-
PARTY DRG NO:- L SECTION-260	straightness:-1.50meter	APPROVED BY:-
SECTION NO:- NP-84	TWIST:-1.50mm/meter	SCALE:- 1:1

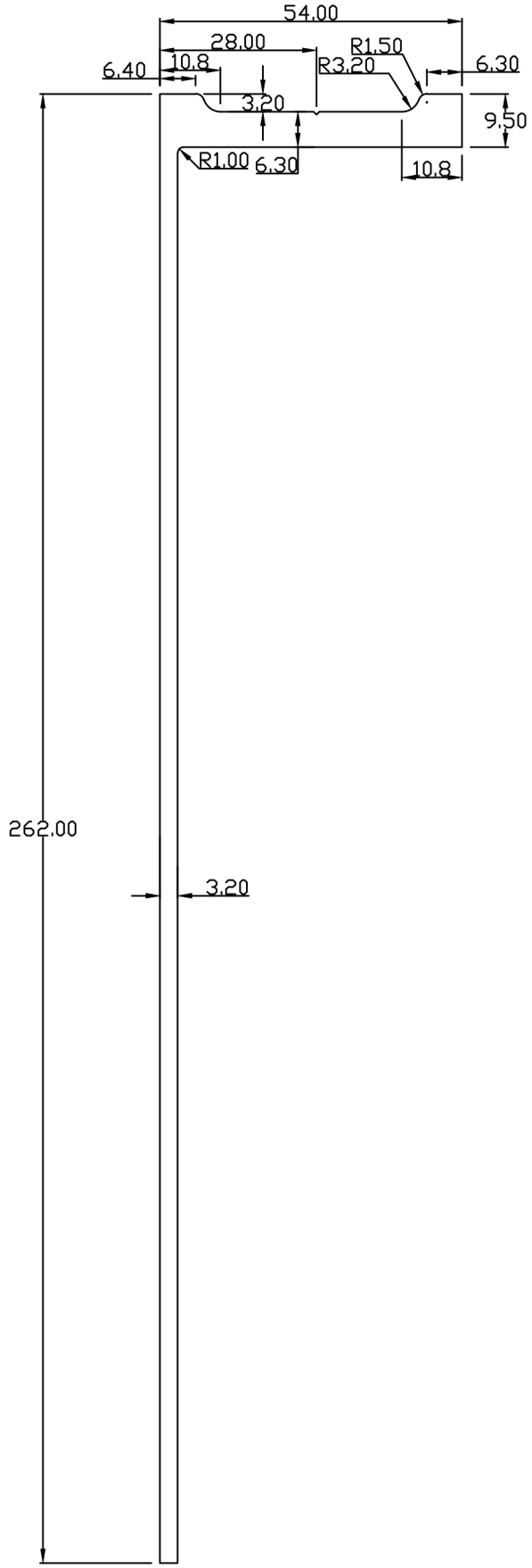

WITH DIN ISO 2768-1 class C = Coarse							
Dimension Longitudional	0.5 - 33 - 6 ±0.2	±0.3	6 - 30 ±0.5	30-120 ±0.8	120-400 ±1.2		
Degree	0.5 - 33 - 6 ±0.4		6 - 30 ±2.0	30-120 ±0.8	±0°15°		
Radius Chamfer	±1.0 at 10	10-50	50-120120-400over 400				

NOTE:- ALL DIMENSIONS ARE IN mm.

AREA:- 1200.6750 Sqmm^	ALLOY/TEMPER:- 6061 T6	
EX PERIMETER:- 634.7887 MM	FLATNESS:-±1.0mm^	DATE:-
WEIGHT:- 3.2418 Kg/Mtr.	TOLERANCES:	PARTY NAME:-
DESCRIPTION:-	ANGULARITY:-±1.0°	(M) No.:-
PARTY DRG. No.:- 250mm L SECTION	straightness:-1.00mm/meter	APPROVED BY:-
SECTION NO:- NP-225	TWIST:-1.00mm/meter	SCALE:- 1:1

Global Solutions For Aluminium Extrusions

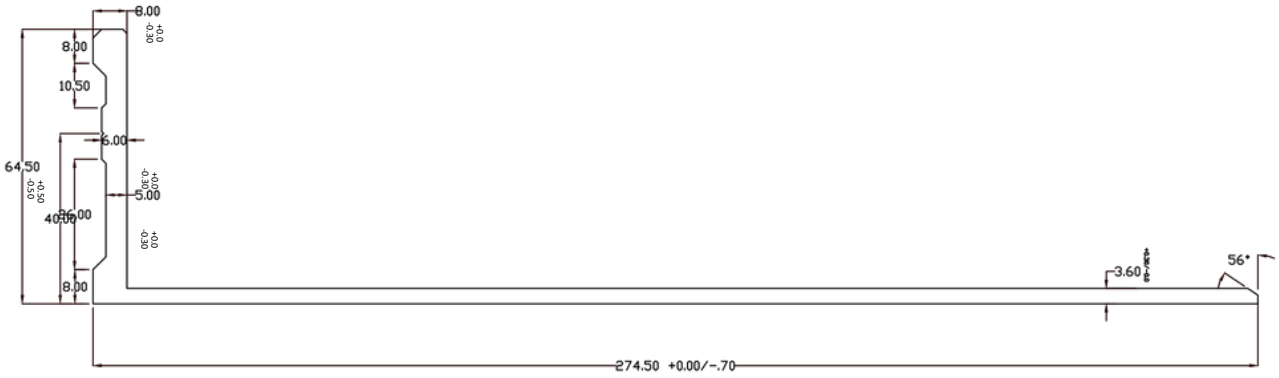

Dimension Longitudional	0.5 - 33 - 6 ±0.2	±0.3	6 - 30 ±0.5	30-120 ±0.8	120-400 ±1.2	400-1000 ±2.0
Dimension Transverse	0.5 - 33 - 6 ±0.4	±1.0	6 - 30 ±2.0	30-120 ±0.8		
Angular Dimension	at 10	10-50	120-400	over 400		

UNSPECIFIED TOLERANCES ARE AS PER CURRENT CODE OF PRACTICE

±0°30'

±0°15'

NOTE:- ALL DIMENSIONS ARE IN mm.

AREA:- 1347.2458 Sqmm^	ALLOY/TEMPER:- 6061 T6	
EX PERIMETER:- 678.8508 MM	FLATNESS:-±0.7mm^	
WEIGHT:- 3.637 Kg/Mtr.	TOLERANCES:	
DESCRIPTION:- AS PER DRAWING	ANGULARITY:-±1°	CHECKED BY:-
	straightness:-1.50meter	APPROVED BY:-
SECTION NO:- NP-37	TWIST:-1.50mm/meter	SCALE:- 1:1

Global Solutions For Aluminium Extrusions

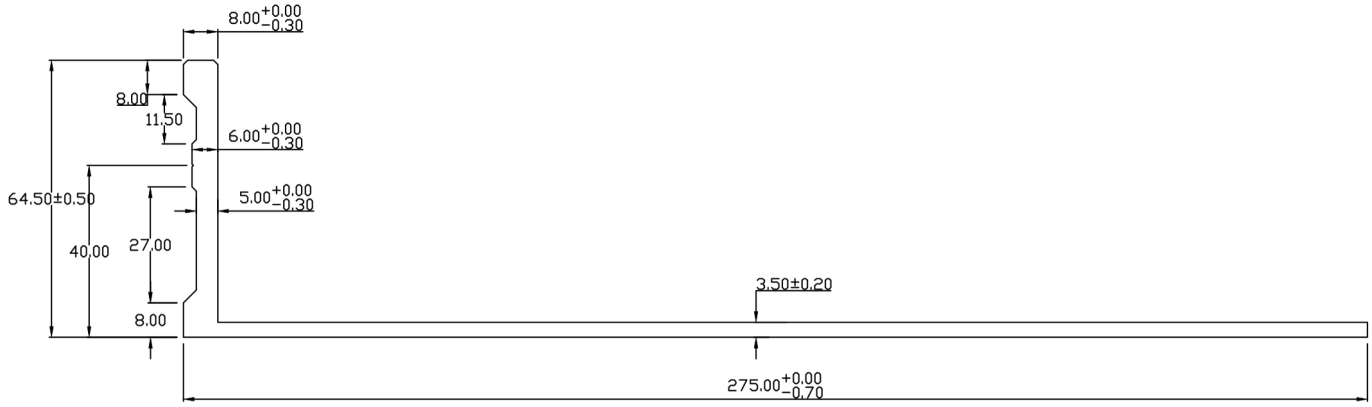

UNSPECIFIED TOLERANCES WILL BE IN ACCORDANCE WITH DIN ISO 2768-1 - Class C

Dimension	0.5 - 3	3 - 6	6 - 30	30-120	120-400	400-1000
Longitudinal	±0.2	±0.3	±0.5	±0.8	±1.2	±2.0
Mitre cut edge angle	0.5 - 3	3 - 6	6 - 30	30-120		
	±0.4	±1.0	±2.0	±0.8		
Mitre cut edge angle	at 10	10-50	50-120	120-400	over 400	

NOTE:- UNSPECIFIED RADIUS:- 0.30 mm.
NOTE:- ALL DIMENSIONS ARE IN mm.

AREA:- 1323.9100 Sqmm^	ALLOY/TEMPER:- 6061 T6	
EX PERIMETER:- 681.3907 MM	FLATNESS:-±0.7mm^	
WEIGHT:- 3.5745 Kg/Mtr.	TOLERANCES:	
DESCRIPTION:- AS PER DRAWING	ANGULARITY:-±1°	(M) No.:-
PARTY DRG NO:-	straightness:-1.50meter	APPROVED BY:-
SECTION NO:- NP-229	TWIST:-1.50mm/meter	SCALE:- 1:1

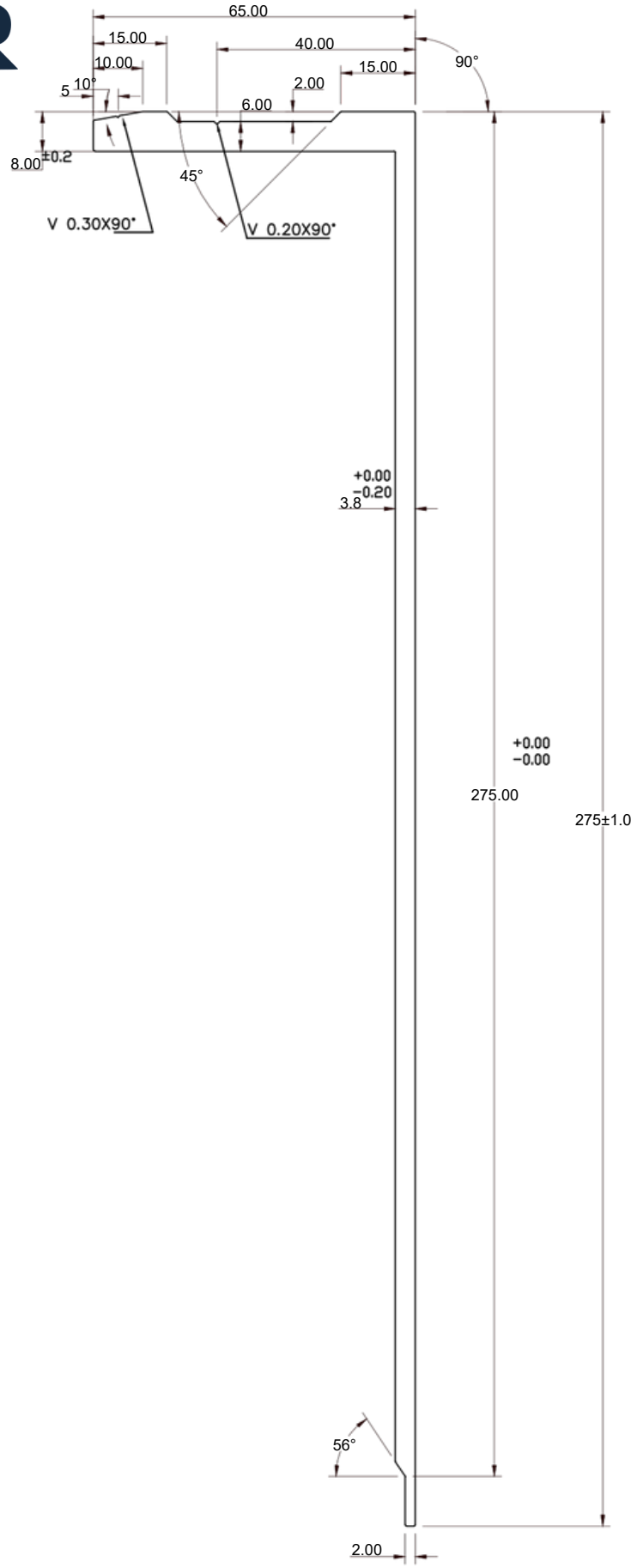

NOTE:- UN-SPECIFIED CORNNER RADIOUS ARE 0.30 mm.
NOTE:- ALL DIMENSIONS ARE IN mm.

UNSPECIFIED TOLERANCES WILL BE IN ACCORDANCE WITH DIN ISO 2768-1 class C - COARSE

Dimension	0.5 - 33 - 6	6 - 30	30-120	120-400	400-1000
Longitudional	±0.2 ±0.4	±0.3	±0.5	±0.8	±1.2	±2.0
Degree	0.5 - 33 - 6	6 - 30	30-120	120-400	
Radius & chamfer	±1.0 at 10	10-50	50-120	120-400	over 400

AREA:- 1529.5827 Sqmm^	ALLOY/TEMPER:- 6063 T6	
EX PERIMETER:- 698.6581 MM	FLATNESS:-±0.8mm^	
WEIGHT:- 4.130 Kg/Mtr.	TOLERANCES:	
DESCRIPTION:- L SECTION 65X275	ANGULARITY:-±2°	CHECKED BY:-
	straightness:-1.70meter	APPROVED BY:-
SECTION NO:- N-1708	TWIST:-1.70mm/meter	SCALE:- 1:1

Global Solutions For Aluminium Extrusions

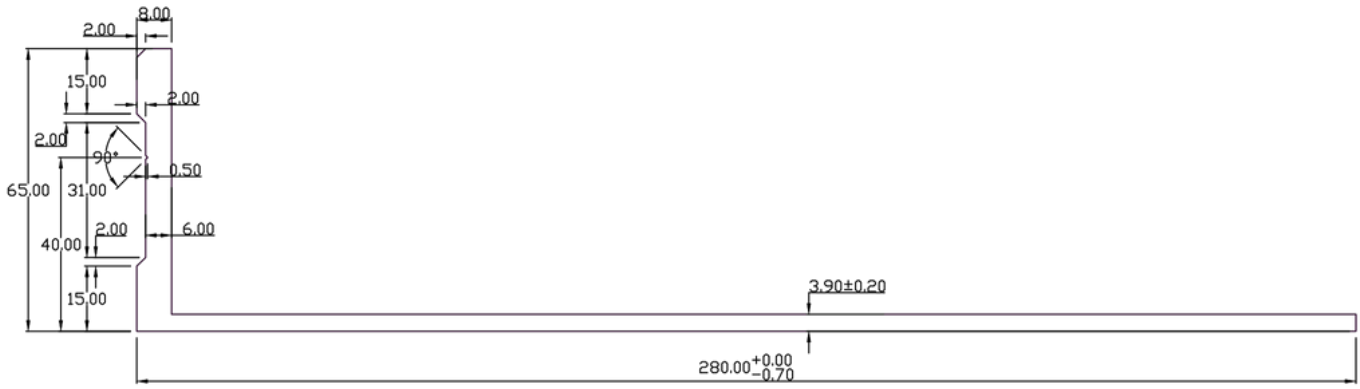

UNSPECIFIED TOLERANCES WELDED IN ACCORDANCE WITH DIN ISO 2768-1 class C - Coarse

Dimension Longitudional	0.5 - 33 - 6 ±0.2	6 - 30 ±0.3	6 - 30 ±1° ±0.5	30-120 ±0.8	120-400 ±1.2	400-1000 ±2.0
Dia. Radius & Diameter	0.5 - 33 - 6 ±0.4	6 - 30 ±2.0	30-120 ±0.8			
Machining Tolerances	at 10	10-505-120	120-400	over 400		

±30°
±15°

NOTE:- UNSPECIFIED RADIUS:- 0.30 mm.
NOTE:- ALL DIMENSIONS ARE IN mm.

AREA:- 1512.5500 Sqmm^	ALLOY/TEMPER:- 6061 T6	
EX PERIMETER:- 690.8995 MM	FLATNESS:-±0.7mm^	
WEIGHT:- 4.0838 Kg/Mtr.	TOLERANCES:	PARTY NAME:-
DESCRIPTION:- AS PER DRAWING	ANGULARITY:-±1°	(M) No.:-
PARTY DRG NO:-	straightness:-1.50meter	APPROVED BY:-
SECTION NO:- NP-315	TWIST:-1.50mm/meter	SCALE:- 1:1

Global Solutions For Aluminium Extrusions

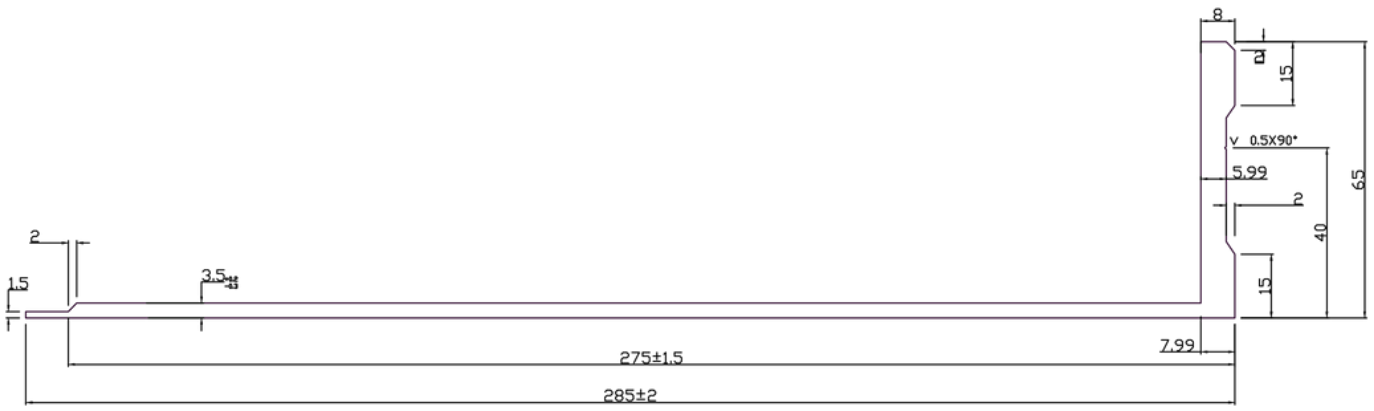

Dimension	0.5 - 33 - 6	6 - 30	30-120	120-400	400-1000
Longitudional	±0.2 ±0.4	±0.5 ±1°	±0.8	±1.2	±2.0
Mounting surface	0.5 - 33 - 6	6 - 30 ±2.0	30-120 ±0.8	over 400	
Dimension	±0.3				
Mounting surface	10-505	±1.0 at 10	120120-400		

UNSPECIFIED TOLERANCES ARE IN ACCORDANCE WITH ISO 2768-1 CLASS MEDIUM

±0°30'

±0°15'

NOTE:- ALL DIMENSIONS ARE IN mm.

AREA:- 1405.5965 Sqmm^	ALLOY/TEMPER:- 6061 T6	
EX PERIMETER:- 709.3425 MM	FLATNESS:-±0.7mm^	
WEIGHT:- 3.795 Kg/Mtr.	TOLERANCES:	
DESCRIPTION:- AS PER DRAWING	ANGULARITY:-±1°	CHECKED BY:-
PARTY DRG NO:- L SECTION-285	straightness:-1.50meter	APPROVED BY:-
SECTION NO:- NP-83	TWIST:-1.50mm/meter	SCALE:- 1:1

Global Solutions For Aluminium Extrusions

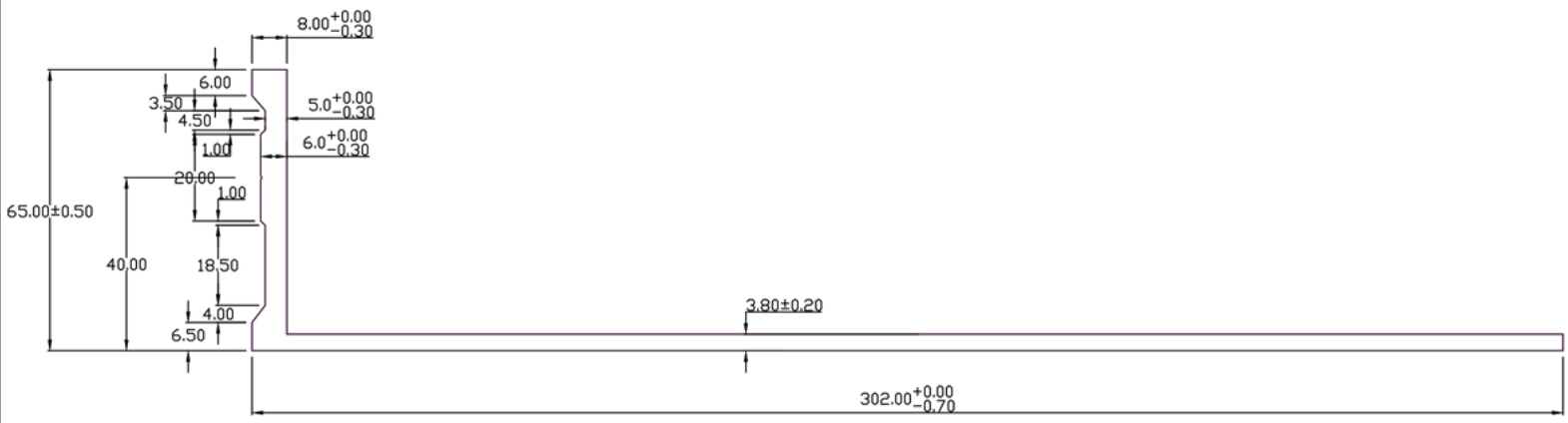

UNSPECIFIED TOLERANCES WILL BE IN ACCORDANCE WITH DIN ISO 2768-1 Fine Coarse

Dimension Longitudinal	0.5 - 3	3 - 6	6 - 30	30-90	90-120	120-400	400-1000
	±0.2	±0.3	±0.5	±0.8	±0.8	±1.2	±2.0
Mounting Dimension for Assembly	0.5 - 33	33 - 6	6 - 30	30-120			
	±0.4		±2.0	±1 ±0.8			
Angle	±1.0 at 10	10-50	50-120	120-400	over 400		
			±1°	±30'	±15'		

NOTE:- UNSPECIFIED RADIUS:- 0.30 mm.
NOTE:- ALL DIMENSIONS ARE IN mm.

AREA:- 1512.6143 Sqmm^	ALLOY/TEMPER:- 6061 T6	
EX PERIMETER:- 737.0432 MM	FLATNESS:-±0.7mm^	
WEIGHT:- 4.0840 Kg/Mtr.	TOLERANCES:	PARTY NAME:-
DESCRIPTION:- AS PER DRAWING	ANGULARITY:-±1°	(M) No.:-
PARTY DRG NO:- AX-300	straightness:-1.50meter	APPROVED BY:-
SECTION NO:- NP-192-A	TWIST:-1.50mm/meter	SCALE:- 1:1

Global Solutions For Aluminium Extrusions

UNSPECIFIED TOLERANCES WELDS ACCORDANCE WITH DIN ISO 2768-1 class C - Coarse

Dimension Longitudional	0.5 - 33 - 6 ±0.2	6 - 30 ±0.3	6 - 30 ±0.5	30-90 ±0.8	90-120 ±0.8	120-400 ±1.2	400-1000 ±2.0
Radius & Angular	0.5 - 33 - 6 ±0.4	6 - 30 ±1.0	6 - 30 ±2.0 ±1°	30-120 ±0.8			
Machining Allowance	at 10	10-50	50-120	120-400	over 400		

±30°
±15°

NOTE:- UNSPECIFIED RADIUS:- 0.30 mm.
NOTE:- ALL DIMENSIONS ARE IN mm.

AREA:- 1477.1244 Sqmm^	ALLOY/TEMPER:- 6061 T6	
EX PERIMETER:- 727.4428 MM	FLATNESS:-±0.7mm^	
WEIGHT:- 3.9882 Kg/Mtr.	TOLERANCES:	
DESCRIPTION:- AS PER DRAWING	ANGULARITY:-±1°	(M) No.:-
PARTY DRG NO:- 1141	straightness:-1.00meter	APPROVED BY:-
SECTION NO:- NP-330	TWIST:-1.00mm/meter	SCALE:- 1:1

Global Solutions For Aluminium Extrusions

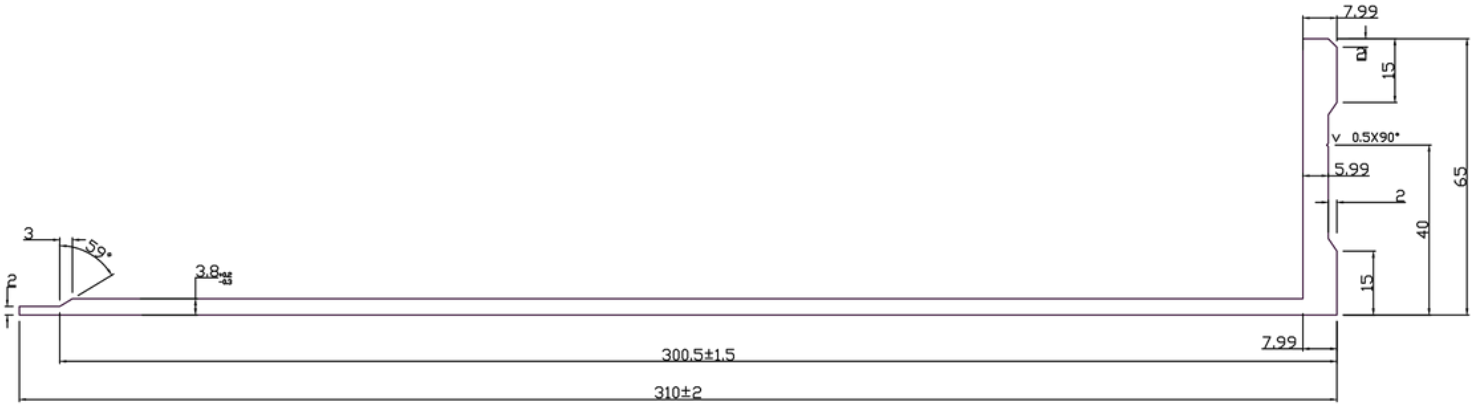

Dimension	0.5 - 3	3 - 6	6 - 30	30-120	120-400	400-1000
Longitudional	±0.2	±0.4	±0.3	±0.5	±0.8	±1.2
Diameter	0.5 - 3	3 - 6	6 - 30	30-120	120-400	over 400
Mm	±1.0 at 10		±2.0	±1°	±0.8	
Degree	10-50	50-120	120-400	over 400		

UNSPECIFIED TOLERANCE AS PER IS 3739 ACCORDANCE

±1°30°

±1°15°

NOTE:- ALL DIMENSIONS ARE IN mm.

AREA:- 1580.3292 Sqmm^	ALLOY/TEMPER:- 6061 T6	
EX PERIMETER:- 759.0408 MM	FLATNESS:-±0.7mm^	
WEIGHT:- 4.267 Kg/Mtr.	TOLERANCES:	
DESCRIPTION:- AS PER DRAWING	ANGULARITY:-±1°	CHECKED BY:-
PARTY DRG NO:- L SECTION-310	straightness:-1.50meter	APPROVED BY:-
SECTION NO:- NP-40	TWIST:-1.50mm/meter	SCALE:- 1:1

Global Solutions For Aluminium Extrusions

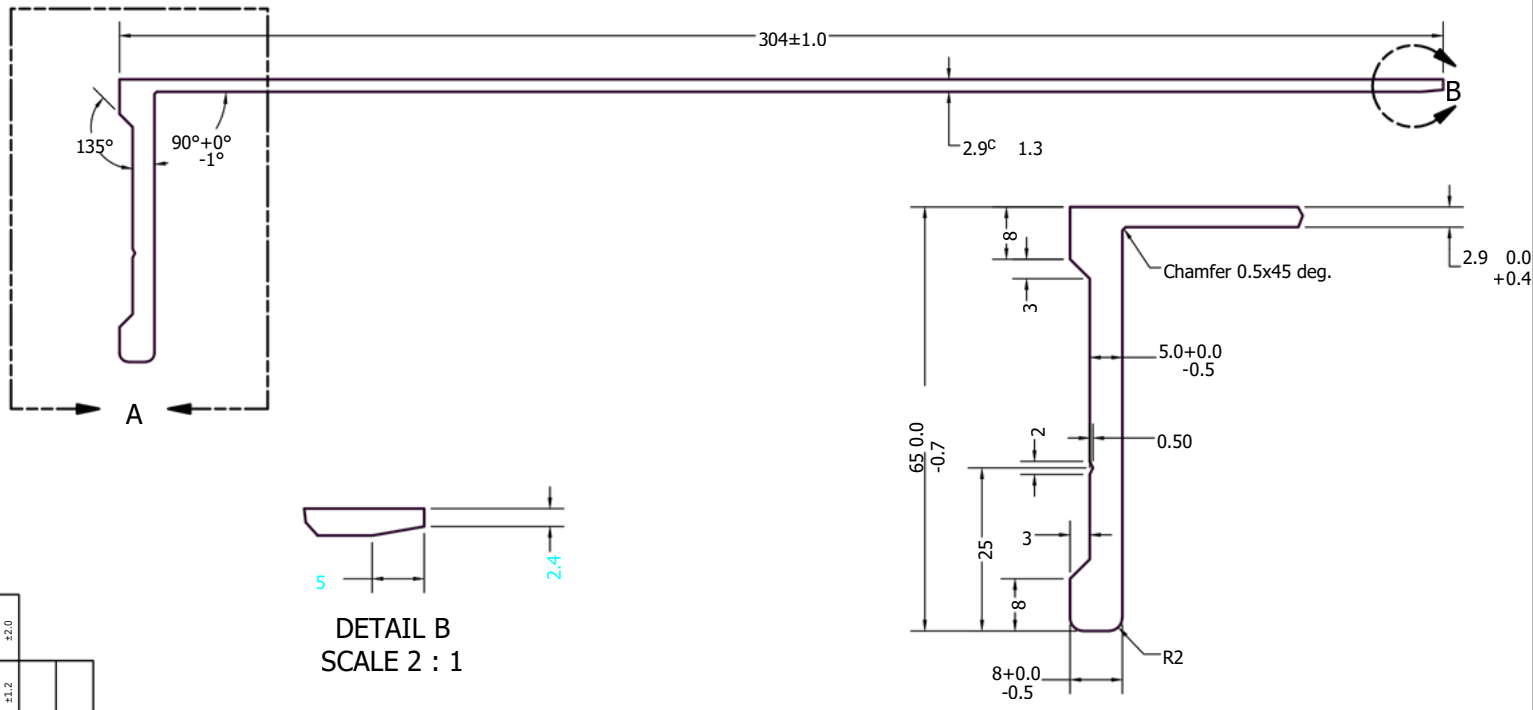

DETAIL B
SCALE 2 : 1

DETAIL A
SCALE 1.5 : 1

NOTE:- UNSPECIFIED RADIUS:- 0.30 mm.
NOTE:- ALL DIMENSIONS ARE IN mm.

UNSPECIFIED TOLERANCES WELDED IN ACCORDANCE WITH DIN ISO 2768-1 class C - Coarse

Dimension Longitudional	0.5 - 3	3 - 6	6 - 30	30-120	120-400	400-1000
	±0.2	±0.3	±0.5	±0.8	±1.2	±2.0
Angular Dimensions	0.5 - 3	3 - 6	6 - 30	30-120	over 400	
	±0.4	±1.0	±2.0	±0.8		
Radius & Chamfer	at 10	10-50	50-120	120-400		

AREA:- 1237.0582 Sqmm^	ALLOY/TEMPER:- 6061 T6	
EX PERIMETER:- 738.2366 MM	FLATNESS:-±0.7mm^	
WEIGHT:- 3.3400 Kg/Mtr.	TOLERANCES:	
DESCRIPTION:- AS PER DRAWING	ANGULARITY:-±1°	(M) No.:-
	straightness:-1.70meter	APPROVED BY:-
SECTION NO:- NP-267	TWIST:-1.70mm/meter	SCALE:- 1:1

Global Solutions For Aluminium Extrusions

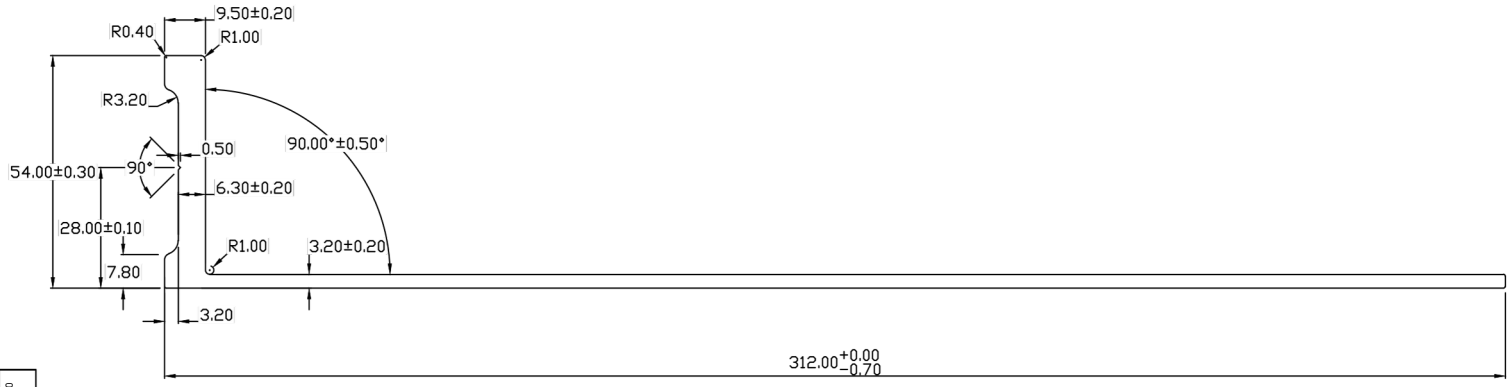

UNSPECIFIED TOLERANCES WELDS TO BE MADE IN ACCORDANCE WITH DIN ISO 2768-2 class C Coarse

Dimension Longitudional	0.5 - 3	3 - 6	6 - 30	30-120	120-400	400-1000
	±0.2	±0.3	±0.5	±0.8	±1.2	±2.0

Angularity for Angles	0.5 - 3	3 - 6	6 - 30	30-120	over 400
	±1.4°		±2.0 ±1°	±0.8	

Minimum Radius	3 - 10	10-50	50-120	120-400
	±1.0 at 10			

NOTE:- UNSPECIFIED RADIUS:- 0.30 mm.
NOTE:- ALL DIMENSIONS ARE IN mm.

AREA:- 1361.5767 Sqmm^	ALLOY/TEMPER:- 6061 T6	
EX PERIMETER:- 733.6727MM	FLATNESS:-±0.7mm^	
WEIGHT:- 3.6762 Kg/Mtr.	TOLERANCES:	
DESCRIPTION:- AS PER DRAWING	ANGULARITY:-±1°	(M) No.:-
	straightness:-1.50meter	APPROVED BY:-
SECTION NO:- NP-211	TWIST:-1.50mm/meter	SCALE:- 1:1

Global Solutions For Aluminium Extrusions

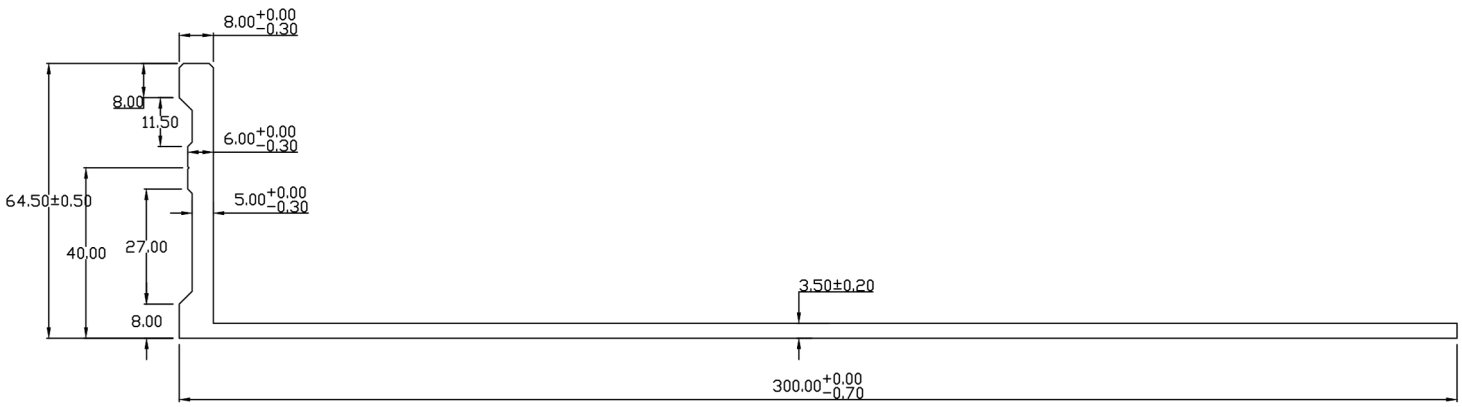

UNSPECIFIED TOLERANCES WILL BE IN ACCORDANCE WITH DIN ISO 2768-1 CLASS C CODE

Dimension Longitudinal	0.5 - 33 - 6 ±0.2 ±0.4	±0.3	6 - 30 ±1° ±0.5	30-120 ±0.8	120-400 ±1.2	400-1000 ±2.0
Profiled diameter Measured diameter	0.5 - 33 - 6 ±1.0 at 10	10-50	6 - 30 ±2.0 ±1°	30-120 ±0.8		
		50-120	120-400	Over 400		

±1°30'
±15°

NOTE:- UNSPECIFIED RADIUS:- 0.30 mm.
NOTE:- ALL DIMENSIONS ARE IN mm.

AREA:- 1411.4100 Sqmm^	ALLOY/TEMPER:- 6061 T6	
EX PERIMETER:- 731.3907 MM	FLATNESS:-±0.7mm^	
WEIGHT:- 3.8108 Kg/Mtr.	TOLERANCES:	
DESCRIPTION:- AS PER DRAWING	ANGULARITY:-±1°	(M) No.:-
	straightness:-1.50meter	APPROVED BY:-
SECTION NO:- NP-192	TWIST:-1.50mm/meter	SCALE:- 1:1

Global Solutions For Aluminium Extrusions

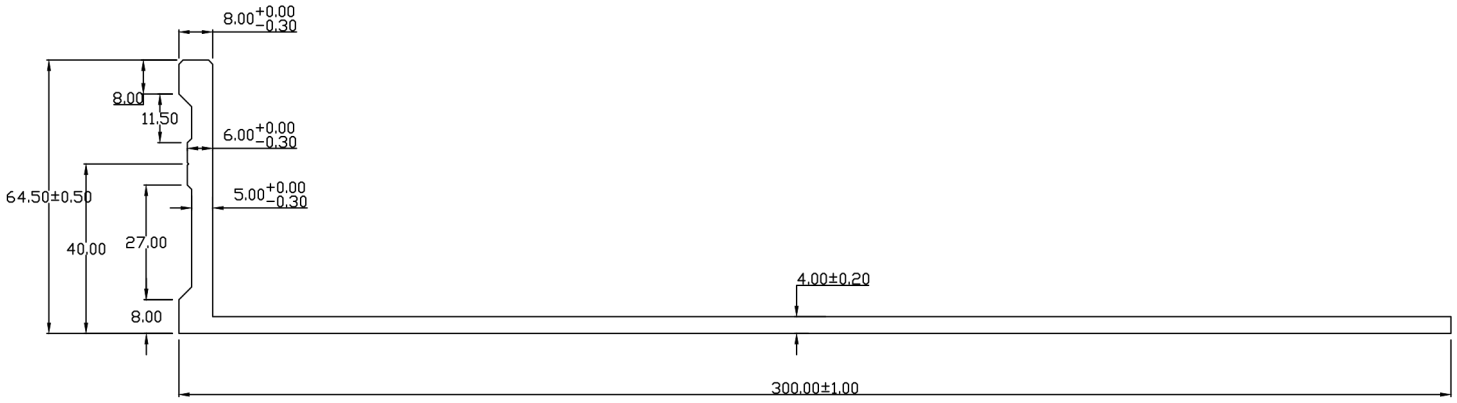

UNSPECIFIED TOLERANCES WILL BE IN ACCORDANCE WITH DIN ISO 2768-2 class C or ISO								
Dimension Longitudional	0.5 - 33 - 6 ±0.2	±0.3	6 - 30 ±0.5	30-120 ±0.8	120-400 ±1.2	400-1000 ±2.0		
Dimension Longitudional	0.5 - 33 - 6 ±0.4	±1.0	6 - 30 ±2.0	30-120 ±0.8				
Dimension Longitudional	at10	10-50	50-120	120-400	over 400			

NOTE:- UNSPECIFIED RADIUS:- 0.30 mm.
NOTE:- ALL DIMENSIONS ARE IN mm.

AREA:- 1557.4100 Sqmm^	ALLOY/TEMPER:- 6061 T6	
EX PERIMETER:- 731.3907 MM	FLATNESS:-±0.7mm^	
WEIGHT:- 4.205 Kg/Mtr.	TOLERANCES:	
DESCRIPTION:- AS PER DRAWING	ANGULARITY:-±1°	(M) No.:-
	straightness:-1.50meter	APPROVED BY:-
SECTION NO:- NP-192	TWIST:-1.50mm/meter	SCALE:- 1:1

Global Solutions For Aluminium Extrusions

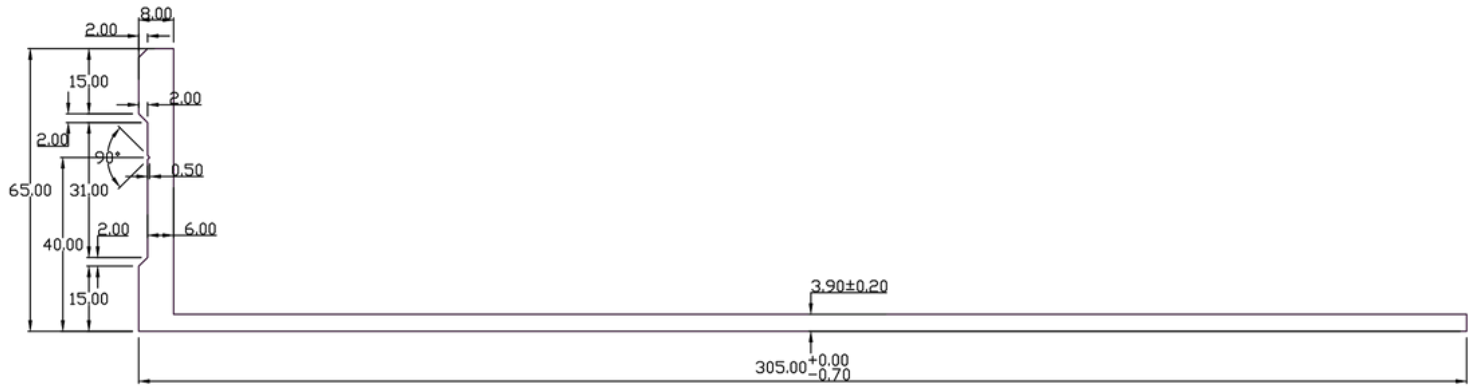

UNSPECIFIED TOLERANCES WELDED WITH DIN ISO 2768-1 class C-Coarse IN ACCORDANCE

Dimension Longitudional	0.5 - 33 - 6 ±0.2	6 - 30 ±0.5	30-90-120 ±0.8	120-400 ±1.2	400-1000 ±2.0
Dimension Radius & angular	0.5 - 33 - 6 ±0.4	6 - 30 ±2.0	30-120 ±0.8		
Machining Tolerances	at 10	±1°			
	±0.3	±1.0	10-50	50-120	120-400 over 400
			±30°	±15°	

NOTE:- UNSPECIFIED RADIUS:- 0.30 mm.
NOTE:- ALL DIMENSIONS ARE IN mm.

AREA:- 1610.0500 Sqmm^	ALLOY/TEMPER:- 6061 T6	
EX PERIMETER:- 740.8995 MM	FLATNESS:-±0.7mm^	
WEIGHT:- 4.3471 Kg/Mtr.	TOLERANCES:	PARTY NAME:-
DESCRIPTION:- AS PER DRAWING	ANGULARITY:-±1°	(M) No.:-
PARTY DRG NO:-	straightness:-1.50meter	APPROVED BY:-
SECTION NO:- NP-314	TWIST:-1.50mm/meter	SCALE:- 1:1

Global Solutions For Aluminium Extrusions

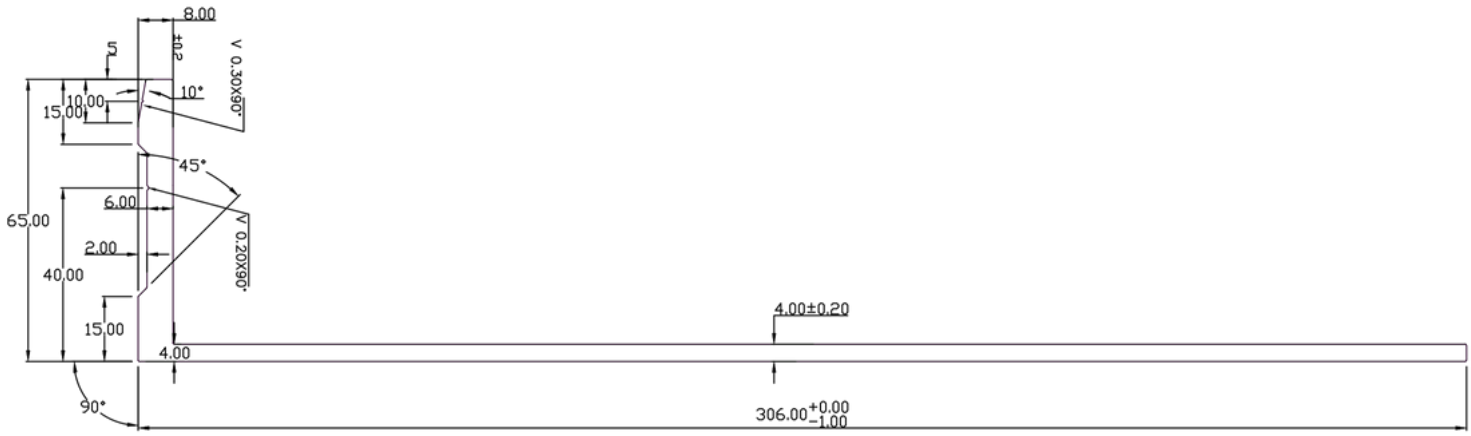

UNSPECIFIED TOLERANCES WILL BE IN ACCORDANCE WITH DIN ISO 2768-1 class C = Coarse

Dimension	0.5 - 3	3 - 6	6 - 30	30 - 120	120 - 400	400 - 1000
Longitudional	±0.2	±0.4	±0.3	±0.5	±0.8	±1.2	±2.0
Mitre angle	0.5 - 3	3 - 6	6 - 30	30 - 120	over 120	
Deviation angle for Radius	±1.0 at 10		±1°	±0.8	±1.2	
			±2.0			
			10-50	50-120	120-400	over 400

±30°
±15°

NOTE:- UNSPECIFIED RADIUS:- 0.30 mm.
NOTE:- ALL DIMENSIONS ARE IN mm.

AREA:- 1636.5692 Sqmm^	ALLOY/TEMPER:- 6061 T6	
EX PERIMETER:- 741.8422 MM	FLATNESS:-±0.7mm^	
WEIGHT:- 4.4187 Kg/Mtr.	TOLERANCES:	PARTY NAME:-
DESCRIPTION:- AS PER DRAWING	ANGULARITY:-±1°	(M) No.:-
PARTY DRG NO:-	straightness:-1.00meter	APPROVED BY:-
SECTION NO:- NP-312	TWIST:-1.00mm/meter	SCALE:- 1:1

Global Solutions For Aluminium Extrusions

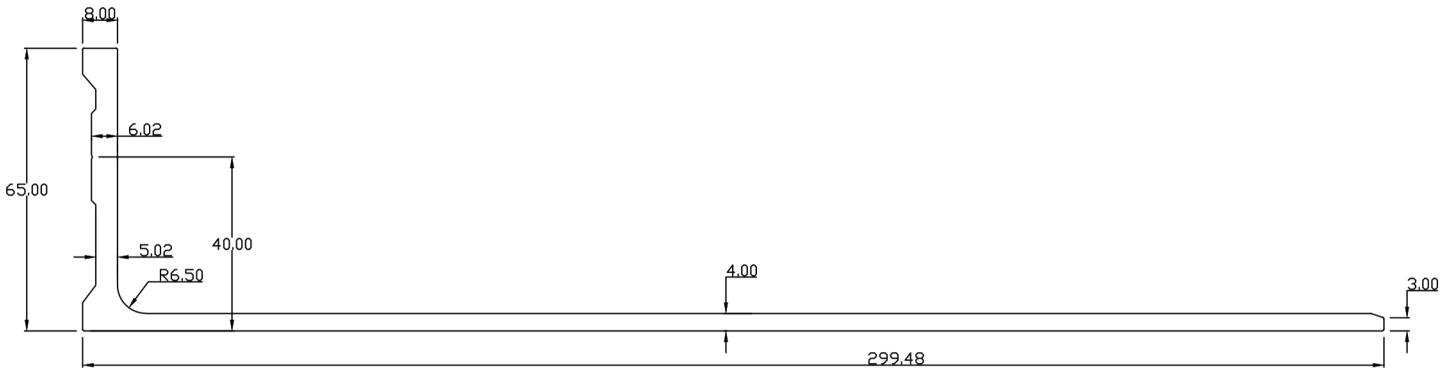

UNSPECIFIED TOLERANCES WILL BE IN ACCORDANCE WITH DIN ISO 2768-1 CLASS COARSE

Dimension	0.5 - 33 - 6	±0.3	6 - 30	30-120	120-400	400-1000
Longitudional	±0.4		±0.5	±0.8	±1.2	±2.0
	0.5 - 33 - 6		6 - 30	30-120		
			±2.0	±0.8		
Mm Radius Transfer	±1.0 at 10	10-50	50-120120-400over 400			

NOTE:- UN-SPECIFIED CORNNER RADIOUS ARE 0.40 mm.
NOTE:- ALL DIMENSIONS ARE IN mm.

AREA:- 1568.8152 Sqmm^	ALLOY/TEMPER:- 6061 T6	
EX PERIMETER:- 727.8020 MM	FLATNESS:-±0.8mm^	
WEIGHT:- 15.503 Kg/12'	TOLERANCES:	
	ANGULARITY:-±2°	CHECKED BY:-
	straightness:-1.0meter	APPROVED BY:-
SECTION NO:- N-1683	TWIST:-1.00mm/meter	SCALE:- 1:1

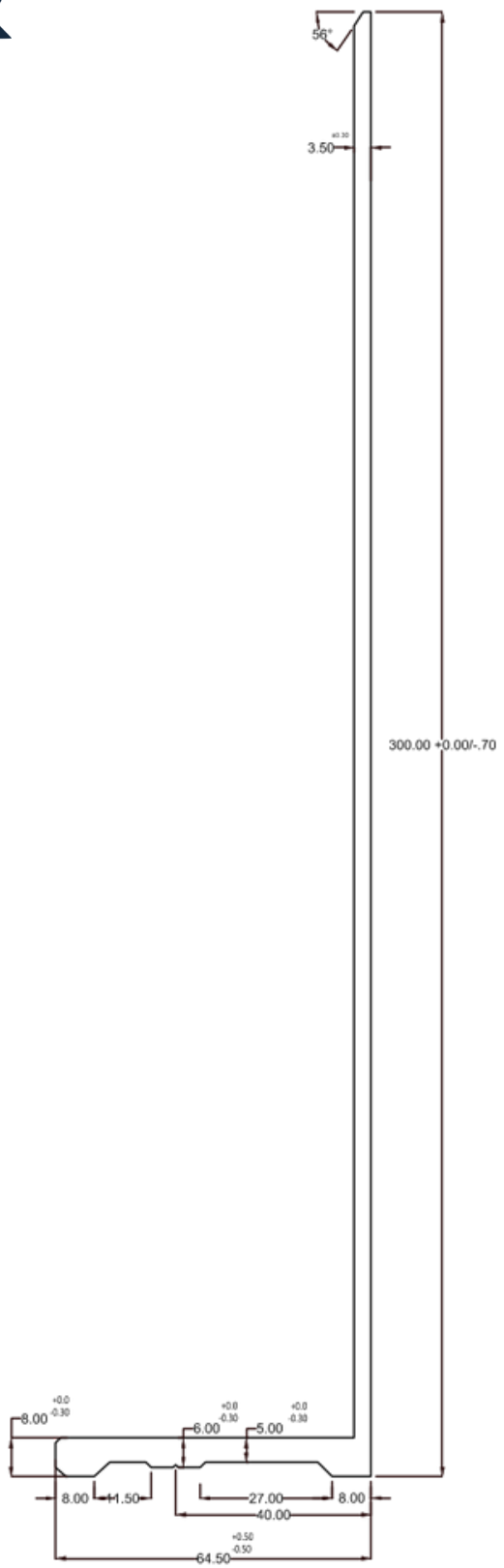

NOTE:- ALL DIMENSIONS ARE IN MM.

UNSPECIFIED TOLERANCES WILL BE IN ACCORDANCE WITH DIN ISO 2768-1 CLASS C = COARSE							
DIMENSION LONGITUDINAL	0.5 - 3 ±0.2	3 - 6 ±0.3	6 - 30 ±0.5	30-120 ±0.8	120-400 ±1.2	400-1000 ±2.0	
CHAMFER & RADIUS	0.5 - 3 ±0.4	3 - 6 ±1.0	6 - 30 ±2.0	30-120 ±0.8			
DEGREES & MINUTES	AT 10	10-50	50-120	120-400	OVER 400		

AREA:- 1407.3380 SQMM*	ALLOY/TEMPER:- 6063 T6	DRAWN BY:
EX PERIMETER:- 733.1938 MM	FLATNESS:-±0.8MM*	DATE:-
WEIGHT:- 13.907 KG/12'	TOLERANCES:	PARTY NAME:
DESCRIPTION:	ANGULARITY:-±2°	CHECKED BY:-
PARTY DRG NO:-	STRAIGHTNESS:-1.70METER	APPROVED BY:-
SECTION NO:- N-1353	TWIST:-1.70MM/METER	SCALE:- 1:1

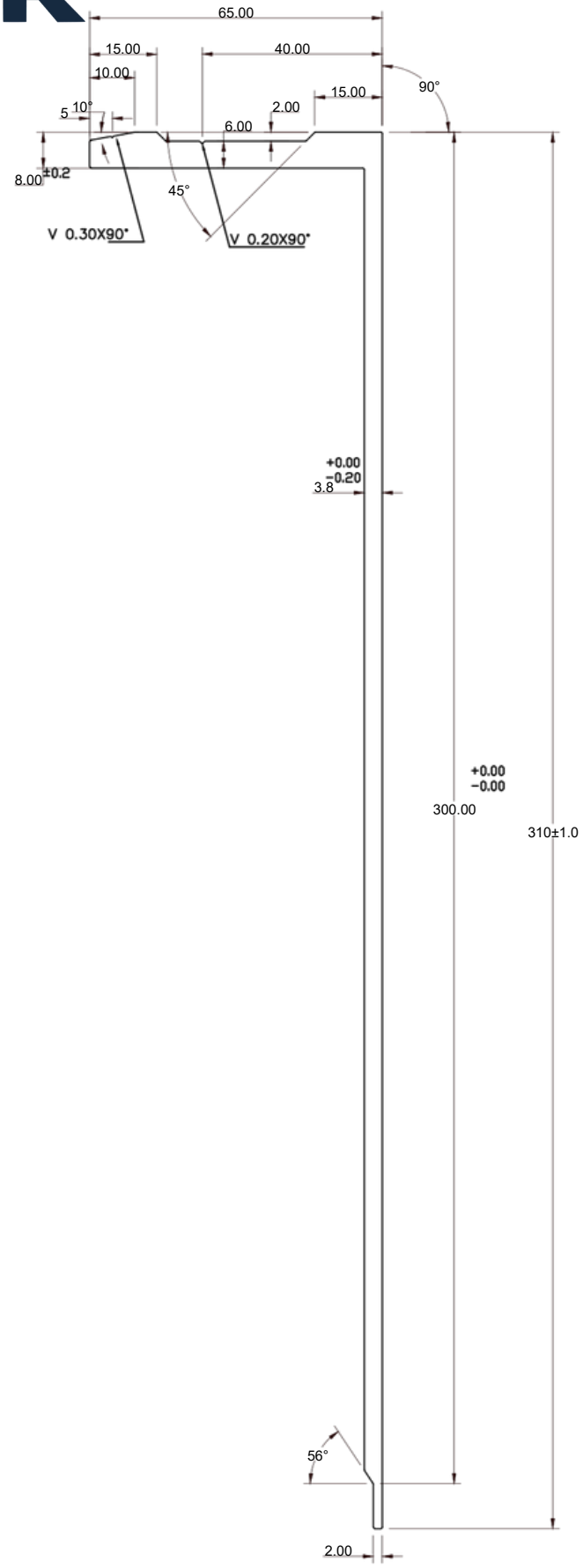

NOTE:- UN-SPECIFIED CORNNER RADIOUS ARE 0.30 mm.
NOTE:- ALL DIMENSIONS ARE IN mm.

UNSPECIFIED TOLERANCES WILL BE IN ACCORDANCE WITH DIN ISO 2768-1 class C= Coarse

Dimension Longitudional	0.5 - 33 - 6 ±0.2	±0.3	6 - 30 ±0.5	30-120 ±0.8	120-400 ±1.2	400-1000 ±2.0
chamfer & radius	0.5 - 33 - 6 ±0.4	±1.0	6 - 30 ±2.0	30-120 ±0.8	±0°±1.5°	
& Degrees	at 10	10-50	50-120120	400over 400		

AREA:- 1629.5827 Sqmm^	ALLOY/TEMPER:- 6063 T6	
EX PERIMETER:- 748.4394 MM	FLATNESS:-±0.8mm^	
WEIGHT:- 4.400 Kg/Mtr.	TOLERANCES:	
DESCRIPTION:- L SECTION 65X300	ANGULARITY:-±2°	CHECKED BY:-
PARTY DRG NO:-	straightness:-1.70meter	APPROVED BY:-
SECTION NO:- N-1709	TWIST:-1.70mm/meter	SCALE:- 1:1

Global Solutions For Aluminium Extrusions

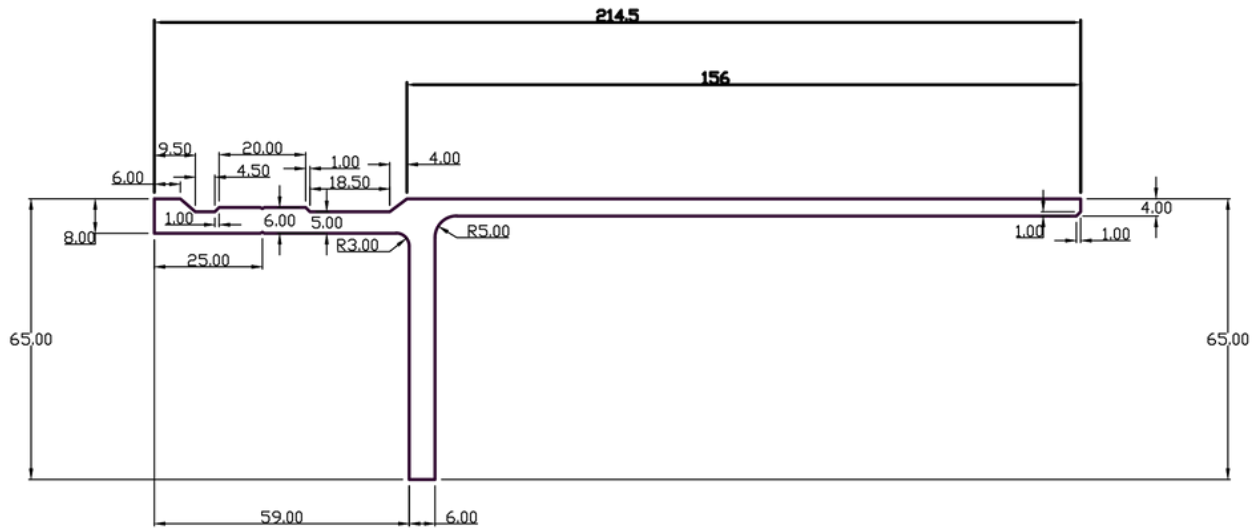

UNSPECIFIED TOLERANCES WILL BE IN ACCORDANCE WITH DIN ISO 2768-1 class Co Course										
Dimension Longitudional	0.5 - 3 3 - 6	±0.3	6 - 30	30-120	120-400	400-1000				
	±0.2		±0.5	±0.8	±1.2	±2.0				
chamfer & radius	0.5 - 3 3 - 6	±1.0	6 - 30	30-120						
	±0.4		±2.0	±0.8						
Degrees & Minutes	at 10	10-505(-120120-400over 400								
		±30°	±15°							

NOTE:- UNSPECIFIED RADIUS:- 0.30 mm.
NOTE:- ALL DIMENSIONS ARE IN mm.

AREA:- 1341.2965 Sqmm^	ALLOY/TEMPER:- 6061 T6	
EX PERIMETER:- 558.1549 MM	FLATNESS:-±0.7mm^	
WEIGHT:- 3.6215 Kg/Mtr.	TOLERANCES:	
DESCRIPTION:- AS PER DRAWING	ANGULARITY:-±1°	(M) No.:-
PARTY DRG NO:-	straightness:-1.50meter	APPROVED BY:-
SECTION NO:- NP-165	TWIST:-1.50mm/meter	SCALE:- 1:1

Global Solutions For Aluminium Extrusions

No negative tolerance positive is ok

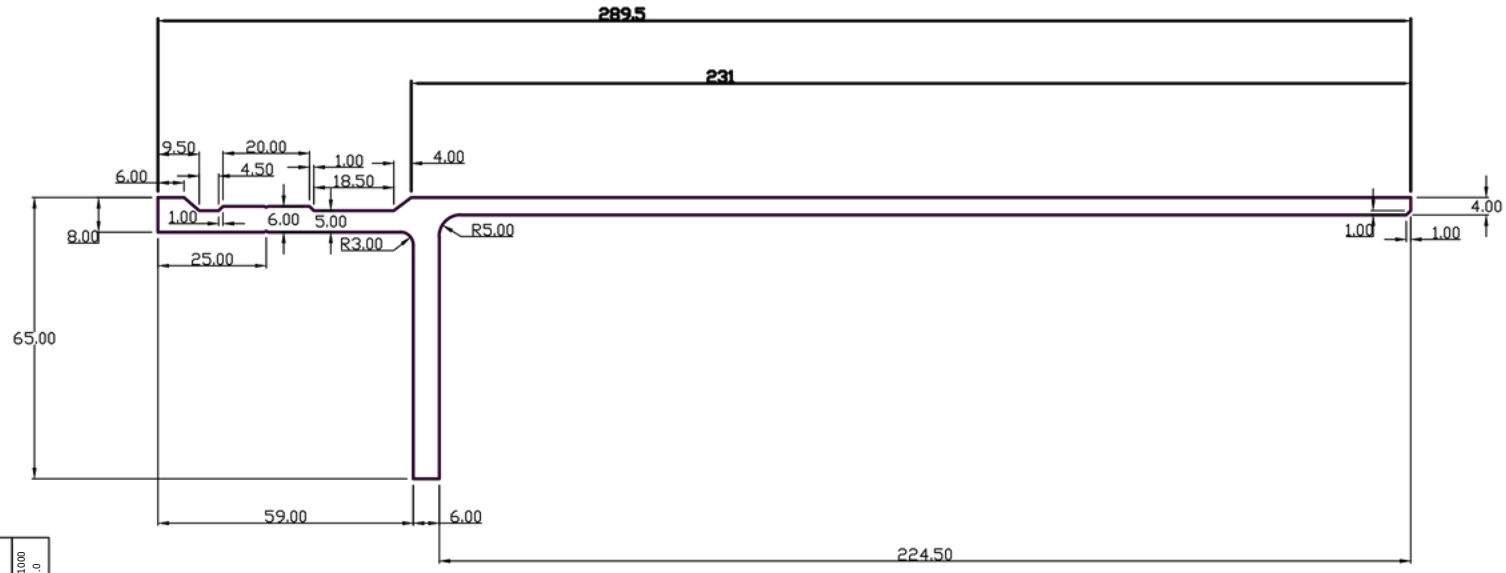

UNSPECIFIED TOLERANCES WILL BE IN ACCORDANCE WITH DIN ISO 2768-1 class Coarse												
Dimension Longitudional	0.5 - 33 - 6 ±0.2	±0.3	6 - 30 ±0.5	30-120 ±0.8	120-400 ±1.2	400-1000 ±2.0						
chamfer & radius	0.5 - 33 - 6 ±0.4		6 - 30 ±2.0	30-120 ±0.8								
Degrees & Minutes	±1° at 10	10-50	50-120	120-400	over 400							

±30'
±15°

NOTE:- UNSPECIFIED RADIUS:- 0.30 mm.
NOTE:- ALL DIMENSIONS ARE IN mm.

AREA:- 1641.2965 Sqmm^	ALLOY/TEMPER:- 6061 T6	
EX PERIMETER:- 708.1549 MM	FLATNESS:-±0.7mm^	
WEIGHT:- 4.4315 Kg/Mtr.	TOLERANCES:	
DESCRIPTION:- AS PER DRAWING	ANGULARITY:-±1°	(M) No.:-
	straightness:-1.50meter	APPROVED BY:-
SECTION NO:- NP-166	TWIST:-1.50mm/meter	SCALE:- 1:1

Global Solutions For Aluminium Extrusions

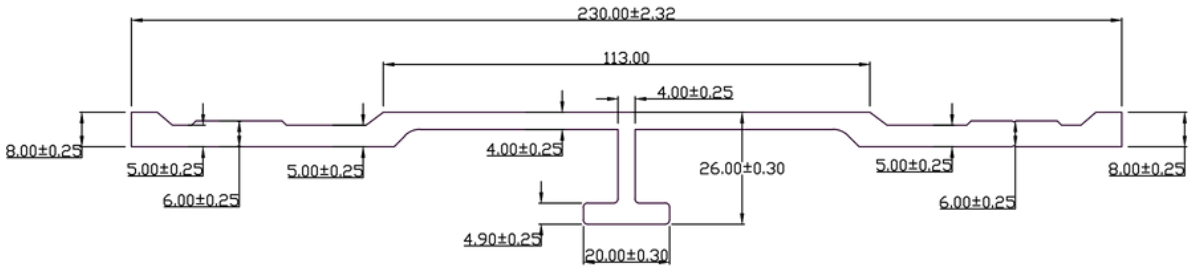

UNSPECIFIED TOLERANCES WILL BE IN ACCORDANCE WITH DIN ISO 2768-1-Fine, Cut Edges

Dimension	0.5 - 33 - 6	6 - 30	30-120	120-400	400-1000
Longitudional	±0.2	±0.3	±0.5	±0.8	±1.2	±2.0
chamfer & radius	0.5 - 33 - 6 ±0.4	±1.0	6 - 30 ±2.0	30-120 ±0.8	
Degrees ° Minutes	at 10	10-50	50-120	120-400	over 400
			±1°	±1°	±30'

NOTE:- UNSPECIFIED RADIUS:- 0.30 mm.
NOTE:- ALL DIMENSIONS ARE IN mm.

AREA:- 1340.0465 Sqmm^	ALLOY/TEMPER:- 6061 T6	
EX PERIMETER:- 558.6567 MM	FLATNESS:-±0.7mm^	
WEIGHT:- 3.6181 Kg/Mtr.	TOLERANCES:	
DESCRIPTION:- AS PER DRAWING	ANGULARITY:-±1°	(M) No.:-
PARTY DRG NO:-	straightness:-1.50meter	APPROVED BY:-
SECTION NO:- NP-175	TWIST:-1.50mm/meter	SCALE:- 1:1

Global Solutions For Aluminium Extrusions

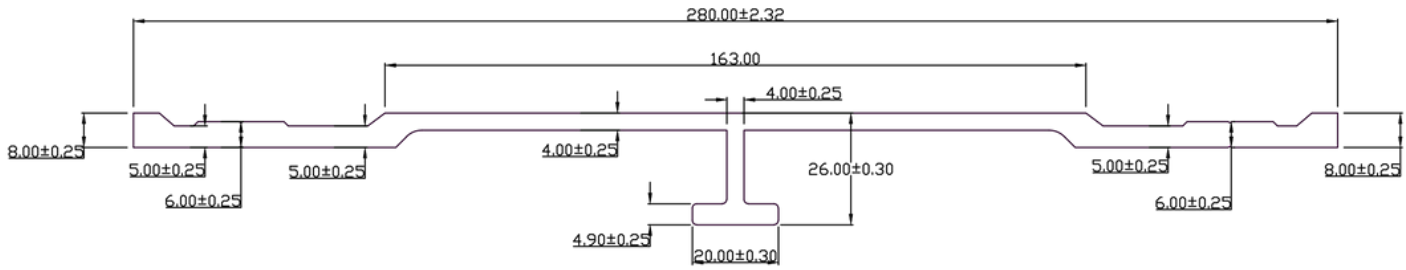

UNSPECIFIED TOLERANCES WILL BE IN ACCORDANCE WITH DIN ISO 2768-1 class C Coarse									
Dimension Longitudional	0.5 - 33 - 6 ±0.2 ±0.4	±0.3	6 - 30 ±0.5	30-120 ±0.8	120-400 ±1.2	400-1000 ±2.0			
chamfer & radius	0.5 - 33 - 6		6 - 30 ±2.0	30-120 ±0.8					
Degrees	±1.0 at 10		±1°						
Minutes		10-505	120120-400	over 400					

±30°
±15°

NOTE:- UNSPECIFIED RADIUS:- 0.30 mm.
NOTE:- ALL DIMENSIONS ARE IN mm.

AREA:- 1540.0465 Sqmm^	ALLOY/TEMPER:- 6061 T6	
EX PERIMETER:- 658.6567 MM	FLATNESS:-±0.7mm^	
WEIGHT:- 4.1581 Kg/Mtr.	TOLERANCES:	
DESCRIPTION:- AS PER DRAWING	ANGULARITY:-±1°	(M) No.:-
PARTY DRG NO:-	straightness:-1.50meter	APPROVED BY:-
SECTION NO:- NP-176	TWIST:-1.50mm/meter	SCALE:- 1:1

Global Solutions For Aluminium Extrusions

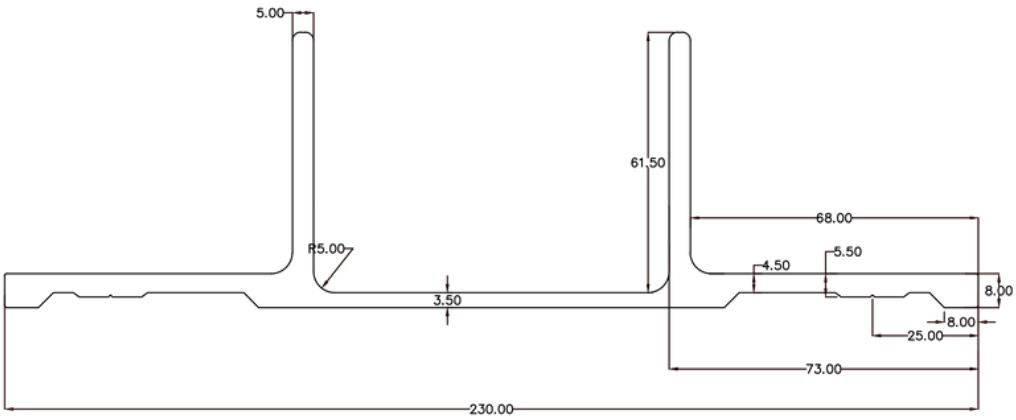

UNSPECIFIED TOLERANCES SHALL BE IN ACCORDANCE WITH ISO 2768-1											
Dimension Longitudional	0.5 - 33 - 6 ±0.2	±0.3	6 - 30 ±0.5	30-90 ±0.8	90-120 ±0.8	120-400 ±1.2	400-1000 ±2.0				
chamfer & radius	0.5 - 33 - 6 ±0.4		6 - 30 ±2.0	30-120 ±1 ±0.8							
Degrees & Minutes	±1.0 at 10		10-50	50-120	120-400	over 400					

±0°30'

±0°15'

NOTE:- ALL DIMENSIONS ARE IN mm.

AREA:- 1742.1269 Sqmm^	ALLOY/TEMPER:- 6061 T6	
EX PERIMETER:- 723.5546 MM	FLATNESS:-±0.7mm^	
WEIGHT:- 4.704 Kg/Mtr.	TOLERANCES:	
DESCRIPTION:-	ANGULARITY:-±1°	CHECKED BY:-
	straightness:-1.50meter	APPROVED BY:-
SECTION NO:- NP-22	TWIST:-1.50mm/meter	SCALE:- 1:1

Global Solutions For Aluminium Extrusions

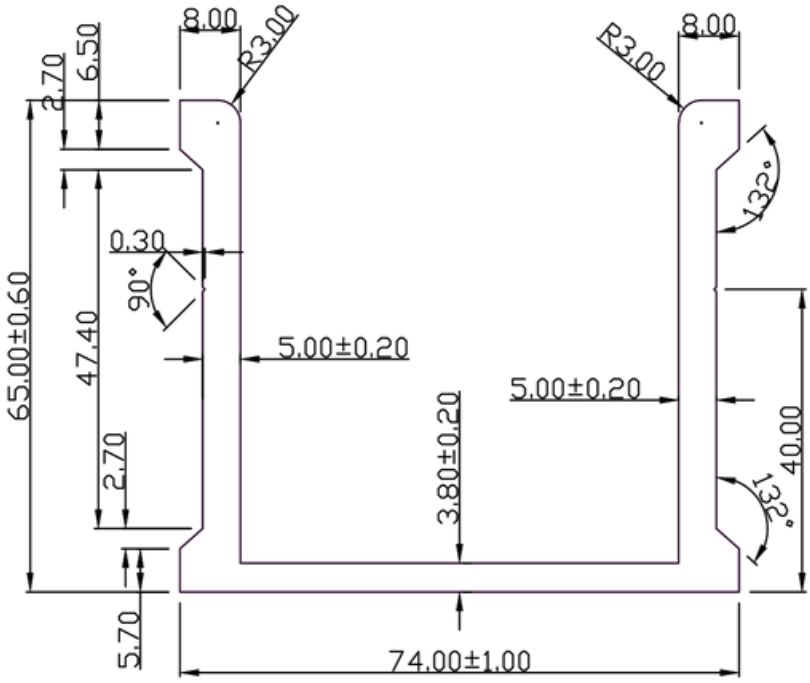

WITH DIN ISO 2768-1 class C = Coarse							
Dimension Longitudional	0.5 - 33 - 6 ±0.2 ±0.4	±0.3	6 - 30 ±0.5	30-120 ±0.8	120-400 ±1.2		
chamfer & radius	0.5 - 33 - 6		6 - 30 ±2.0	30-120 ±0.8	±0°15°		
Degrees & Minutes	±1.0 at 10	10-50	50-120120-400over 400				

NOTE:- ALL DIMENSIONS ARE IN mm.

AREA:- 955.6682 Sqmm^	ALLOY/TEMPER:- 6061 T6	
EX PERIMETER:- 403.6692 MM	FLATNESS:-±1.0mm^	DATE:-
WEIGHT:- 2.5803 Kg/Mtr.	TOLERANCES:	
DESCRIPTION:-	ANGULARITY:-±1.0°	(M) No.:-
PARTY DRG NO:-	straightness:-1.00mm/meter	APPROVED BY:-
SECTION NO:- NP-346	TWIST:-1.00mm/meter	SCALE:- 1:1

Global Solutions For Aluminium Extrusions

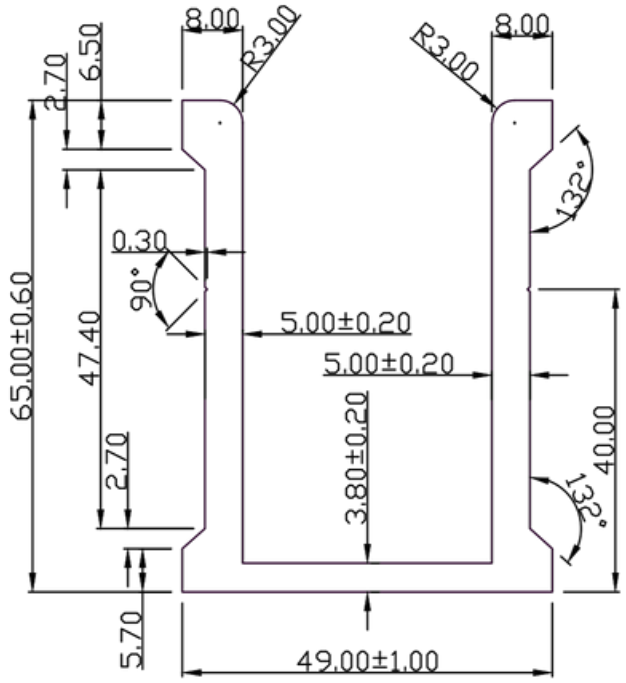

WITH DIN ISO 2768-1 class C = Coarse

Dimension Longitudional	0.5 - 33 - 6 ±0.2 ±0.4	±0.3	6 - 30 ±0.5	30-120 ±0.8	120-400 ±1.2
chamfer & radius	0.5 - 33 - 6		6 - 30 ±2.0	30-120 ±0.8	±0°15°
Degrees & Minutes	±1.0 at 10	10-50	50-120120-400over 400		

NOTE:- ALL DIMENSIONS ARE IN mm.

AREA:- 860.7066 Sqmm^	ALLOY/TEMPER:- 6061 T6	
EX PERIMETER:- 353.6692 MM	FLATNESS:-±1.0mm^	DATE:-
WEIGHT:- 2.3239 Kg/Mtr.	TOLERANCES:	
DESCRIPTION:-	ANGULARITY:-±1.0°	(M) No.:-
PARTY DRG NO:-	straightness:-1.00mm/meter	APPROVED BY:-
SECTION NO:- NP-345	TWIST:-1.00mm/meter	SCALE:- 1:1

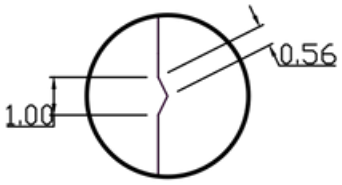

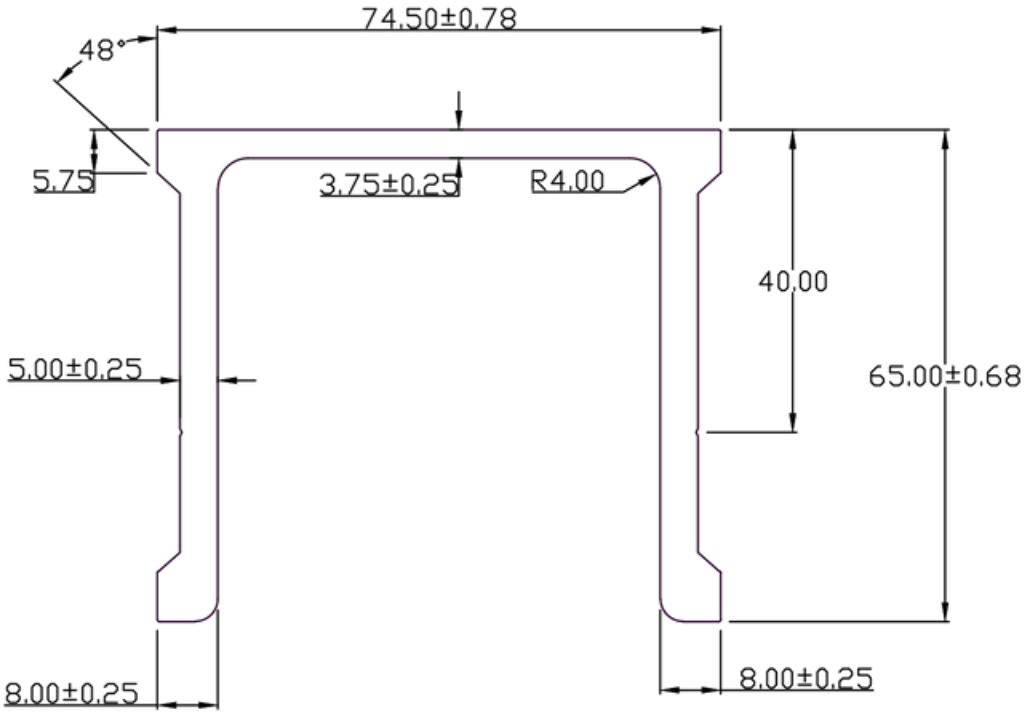

WITH DIN ISO 2768-1 class C = Coarse

Dimension Longitudional	0.5 - 33 - 6 ±0.2 ±0.4	6 - 30 ±0.5	30-120 ±0.8	120-400 ±1.2
chamfer & radius	0.5 - 33 - 6	6 - 30 ±2.0	30-120 ±0.8	±0°15°
Degrees & Minutes	±1.0 at 10	10-50	50-120120-400over 400	

NOTE:- ALL DIMENSIONS ARE IN mm.

AREA:- 961.2925 Sqmm^	ALLOY/TEMPER:- 6063 T6	
EX PERIMETER:- 400.5256 MM	FLATNESS:-±0.9mm^	
WEIGHT:- 2.5954 Kg/m	TOLERANCES:	PARTY NAME:-
DESCRIPTION:-	ANGULARITY:-±1.4°	(M) No.:-
PARTY DRG. No.:- 75 CHX	straightness:-1.50mm/meter	APPROVED BY:-
SECTION NO:- NP-179	TWIST:-2.50mm/meter	SCALE:- 1:1

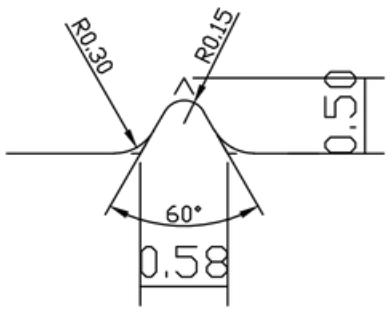

DETAIL:- A
SCALE:-20:1

V = V grove 0.50 x 60°

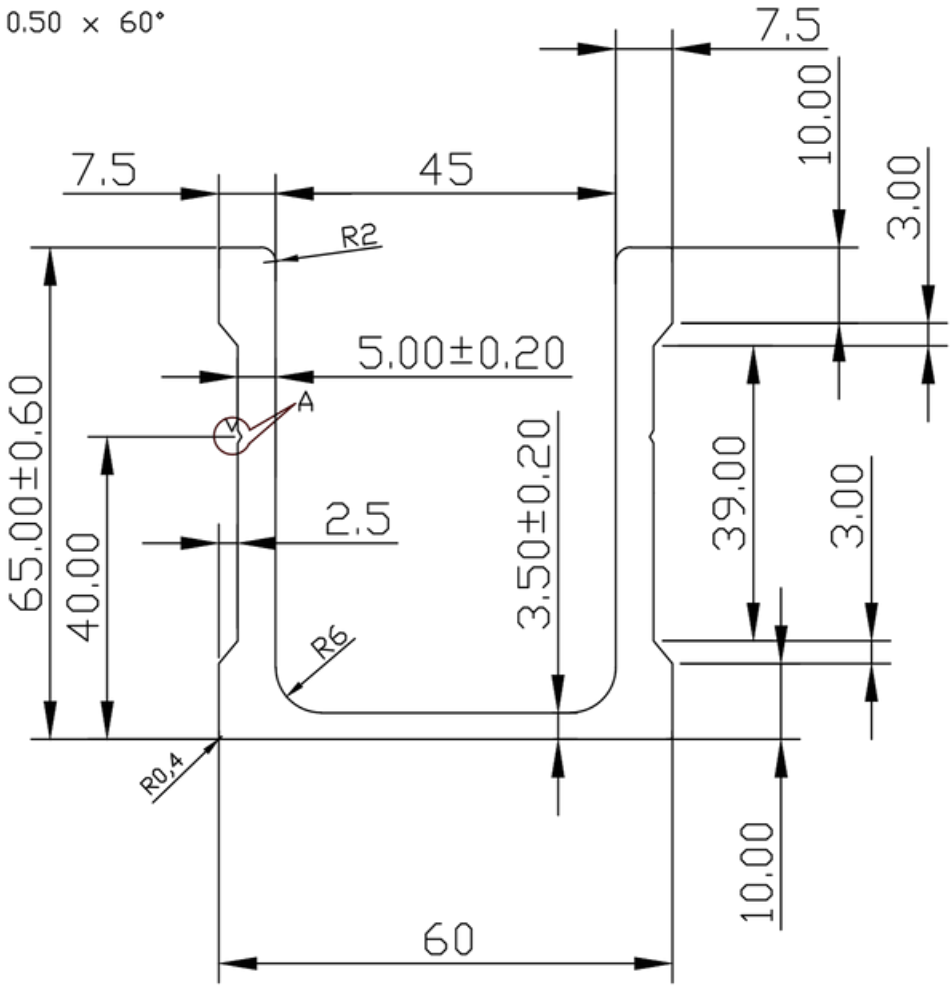

WITH DIN ISO 2768-1 class C = Coarse						
Dimension Longitudional	0.5 - 33 - 6 ±0.2 ±0.4	±0.3	6 - 30 ±0.5	30-120 ±0.8	120-400 ±1.2	
Degree & Angle & Chamfer	0.5 - 33 - 6		6 - 30 ±2.0	30-120 ±0.8	±0°15°	
	±1.0 at 10	10-50	50-120120-400over 400			

NOTE:- ALL DIMENSIONS ARE IN mm.

AREA:- 935.2311 Sqmm^	ALLOY/TEMPER:- 6061 T6	
EX PERIMETER:- 369.6024 MM	FLATNESS:-±0.9mm^	DATE:-
WEIGHT:- 2.5251 Kg/Mtr.	TOLERANCES:	PARTY NAME:-
DESCRIPTION:-	ANGULARITY:-±1.4°	(M) No.:-
PARTY DRG. No.:-60 CHANNEL	straightness:-1.50mm/meter	APPROVED BY:-
SECTION NO:- NP-204	TWIST:-2.50mm/meter	SCALE:- 1:1

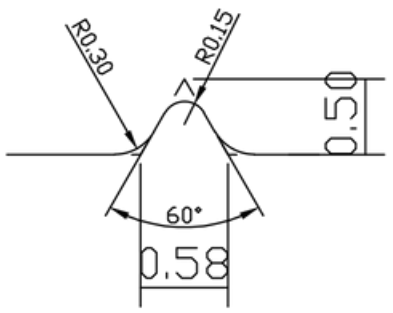

DETAIL:- A
SCALE:-20:1

V = V grove 0.50 x 60°

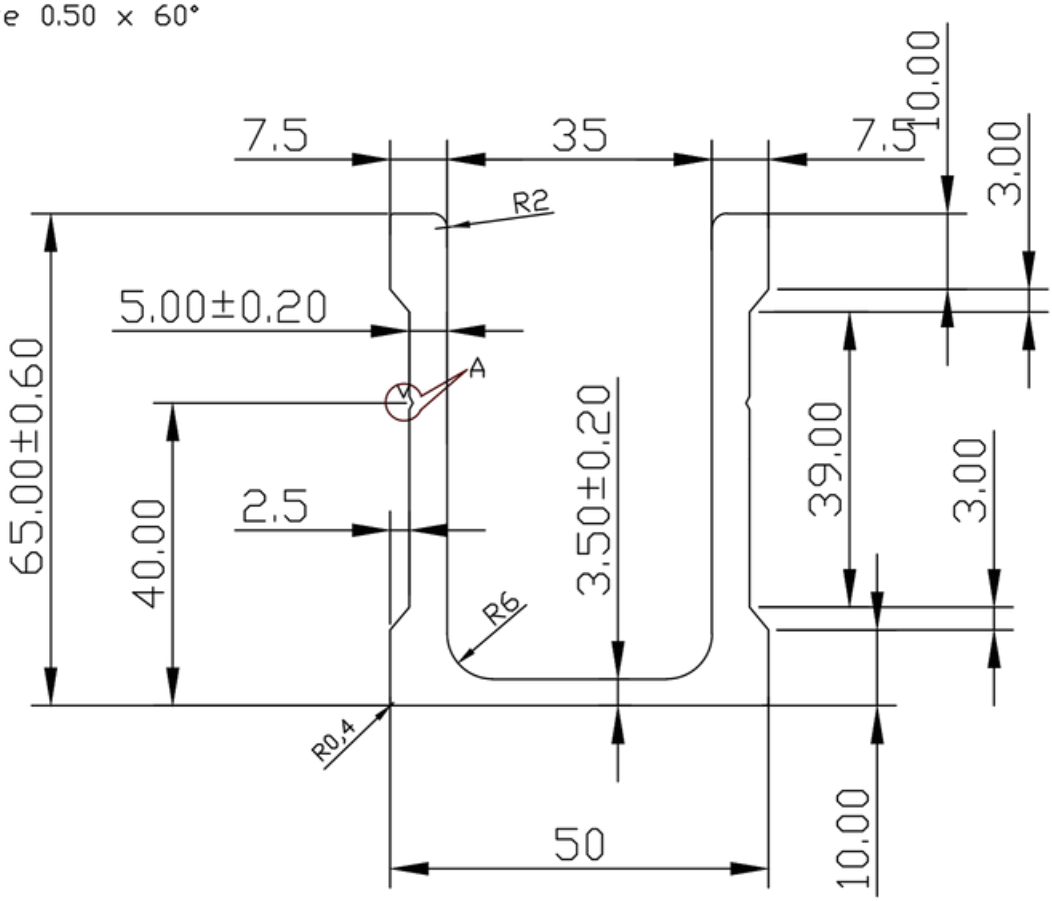

WITH DIN ISO 2768-1 class C = Coarse

Dimension	0.5 - 33 - 6	±0.3	6 - 30	30-120	120-400
Longitudional	±0.2 ±0.4		±0.5	±0.8	±1.2
Degree	0.5 - 33 - 6		6 - 30	30-120	±0°15°
Radius & Chamfer	±1.0 at 10	10-50	50-120120-400	over 400	

NOTE:- ALL DIMENSIONS ARE IN mm.

AREA:- 900.2311 Sqmm^	ALLOY/TEMPER:- 6061 T6	
EX PERIMETER:- 349.6024 MM	FLATNESS:-±0.9mm^	DATE:-
WEIGHT:- 2.4306 Kg/Mtr.	TOLERANCES:	PARTY NAME:-
DESCRIPTION:-	ANGULARITY:-±1.4°	(M) No.:-
PARTY DRG. No.:-50 CHANNEL	straightness:-1.50mm/meter	APPROVED BY:-
SECTION NO:- NP-205	TWIST:-2.50mm/meter	SCALE:- 1:1

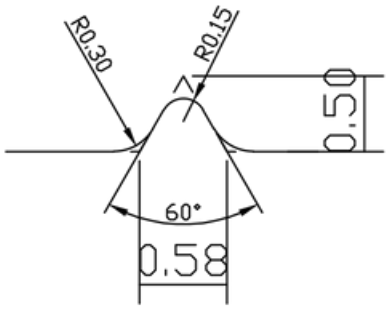

DETAIL:- A
SCALE:-20:1

V = V grove 0.50 x 60°

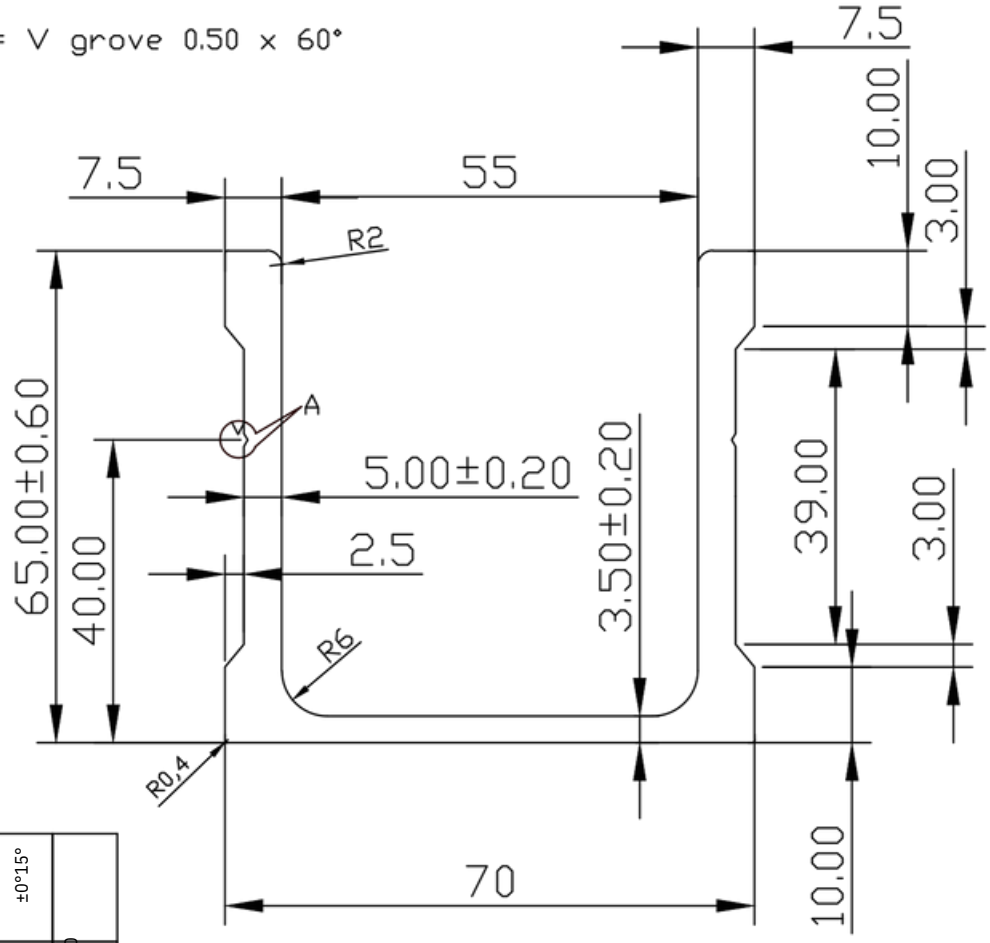

WITH DIN ISO 2768-1 class C = Coarse					
Dimension Longitudional	0.5 - 33 - 6 ±0.2 ±0.4	±0.3	6 - 30 ±0.5	30-120 ±0.8	120-400 ±1.2
Degree Angle Chamfer	0.5 - 33 - 6		6 - 30 ±2.0	30-120 ±0.8	±0°15°
Radius		10-50	50-120120-400over 400		
		±1.0 at 10			

NOTE:- ALL DIMENSIONS ARE IN mm.

AREA:- 970.2311 Sqmm^	ALLOY/TEMPER:- 6061 T6	
EX PERIMETER:- 389.6024 MM	FLATNESS:-±0.9mm^	DATE:-
WEIGHT:- 2.6196 Kg/Mtr.	TOLERANCES:	PARTY NAME:-
DESCRIPTION:- PARTY DRG.	ANGULARITY:-±1.4°	(M) No.:-
No.:-70 CHANNEL	straightness:-1.50mm/meter	APPROVED BY:-
SECTION NO:- NP-203	TWIST:-2.50mm/meter	SCALE:- 1:1

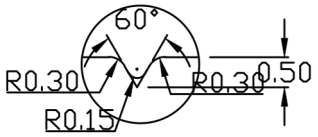

DETAIL:- A
SCALE:- 5:1

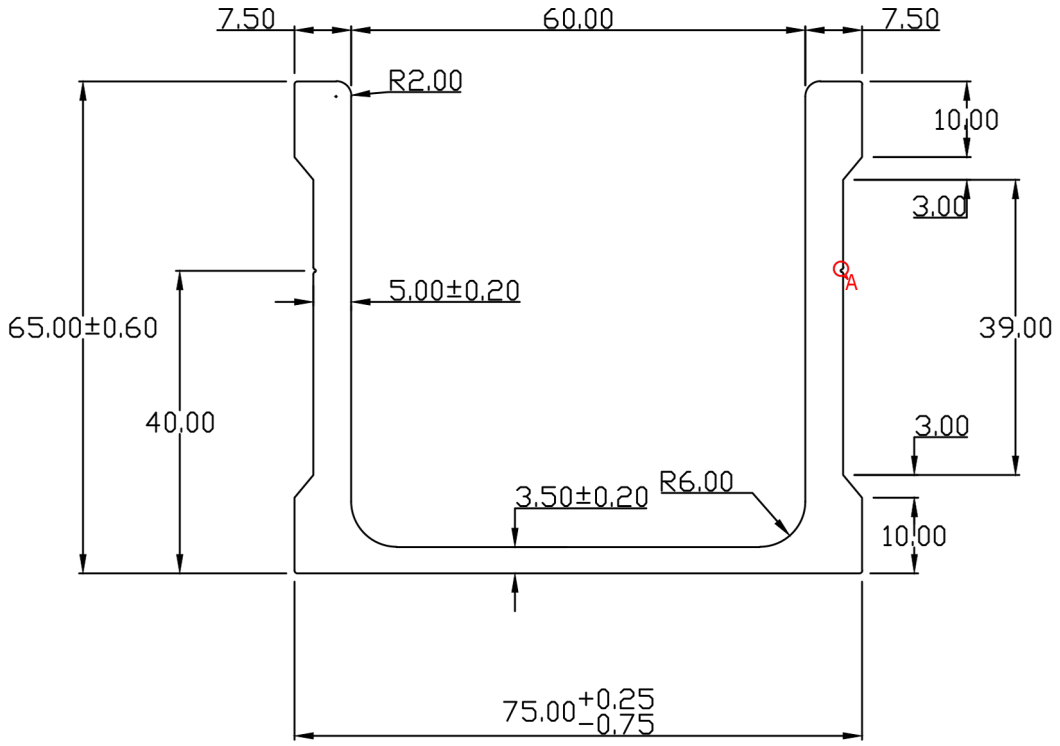

WITH DIN ISO 2768-1 class C = Coarse					
Dimension Longitudional	0.5 - 33 - 6 ±0.2 ±0.4	±0.3	6 - 30 ±0.5	30-120 ±0.8	120-400 ±1.2
Degree & Chamfer	0.5 - 33 - 6		6 - 30 ±2.0	30-120 ±0.8	±0°15°
	±1.0 at 10	10-50	50-120120-400over 400		

NOTE:- ALL DIMENSIONS ARE IN mm.

AREA:- 988.3200 Sqmm^	ALLOY/TEMPER:- 6061 T6	
EX PERIMETER:- 399.6813 MM	FLATNESS:-±0.9mm^	
WEIGHT:- 2.668 Kg/m	TOLERANCES:	
DESCRIPTION:-75 CHANNEL PROFILE	ANGULARITY:-±1.0°	(M) No.:-
PARTY DRG. No.:-	straightness:-±1.0mm/meter	APPROVED BY:-
SECTION NO:- NP-161	TWIST:-±1.0mm/meter	SCALE:- 1:1

Global Solutions For Aluminium Extrusions

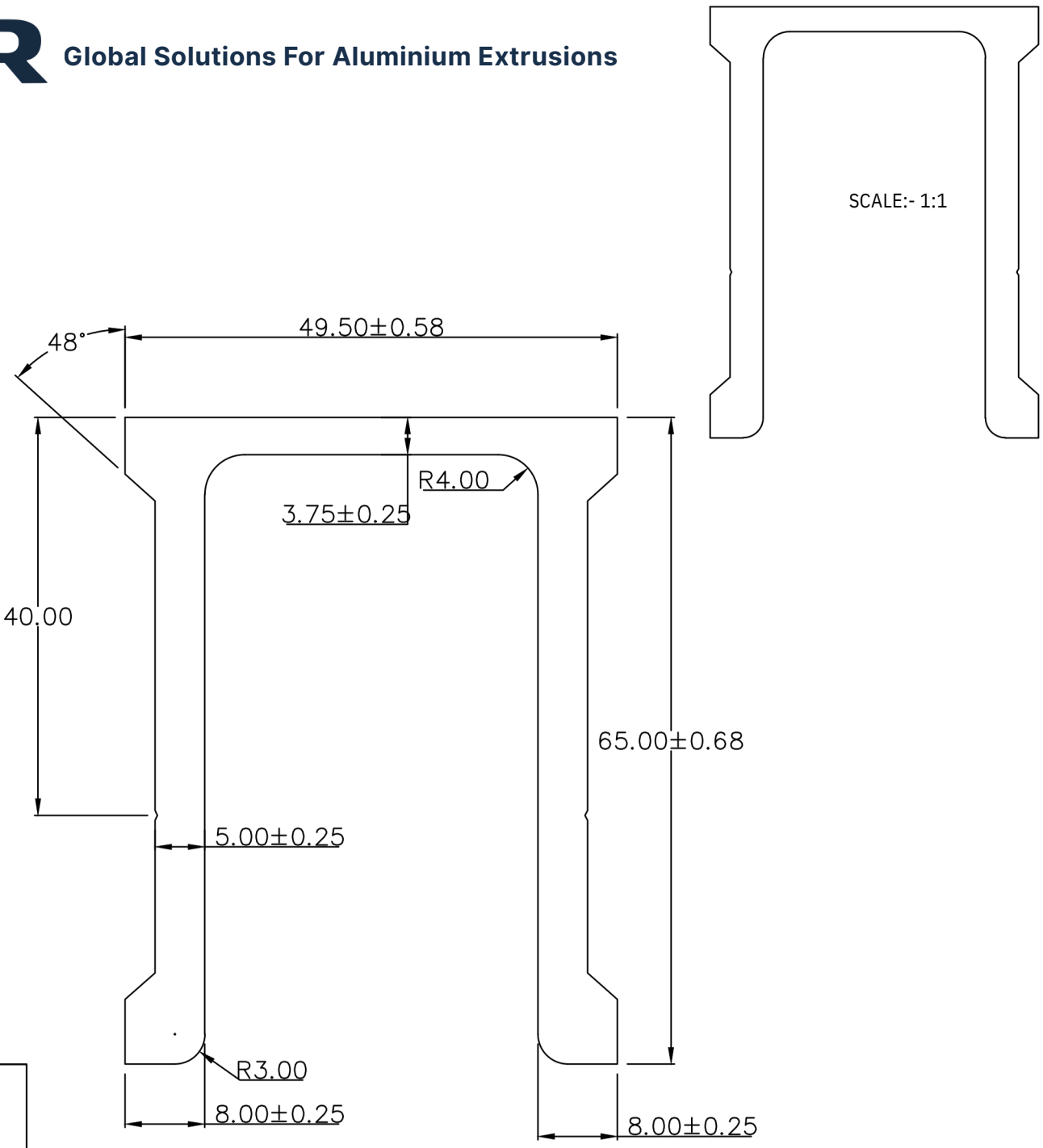

NOTE:- UNSPECIFIED RADIOUS ARE 0.4 mm.
NOTE:- ALL DIMENSIONS ARE IN mm.

UNSPECIFIED TOLERANCES WILL BE IN ACCORDANCE WITH DIN ISO 2768-1 class C = COARSE

Dimension Longitudional	0.5 - 33 - 6	6 - 30	30-120	120-400	400-1000
	±0.2	±0.5	±0.8	±1.2	±2.0
Radius & Chamfer	0.5 - 33 - 6	6 - 30	30-120		
	±0.4	±2.0	±0.8		
Minimum radius		±1°			
	±1.0				
	at 10	10-50	50-120	120-400	over 400
		±0°30'		±0°15'	

AREA:- 867.5781 Sqmm^	ALLOY/TEMPER:- 6063 T6	
EX PERIMETER:- 351.1081 MM	FLATNESS:-±0.8mm^	
WEIGHT:- 2.342 Kg/Mtr.	TOLERANCES:	
DESCRIPTION:-	ANGULARITY:-±2°	CHECKED BY:-
PARTY DRG NO:- 50 CHX	straightness:-1.70meter	APPROVED BY:-
SECTION NO:- NP-02	TWIST:-1.70mm/meter	SCALE:- 1.5:1

Global Solutions For Aluminium Extrusions

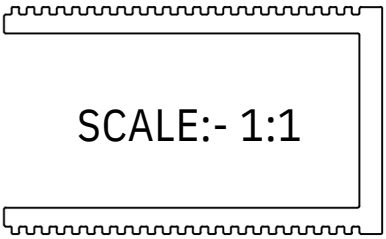

SCALE:- 1:1

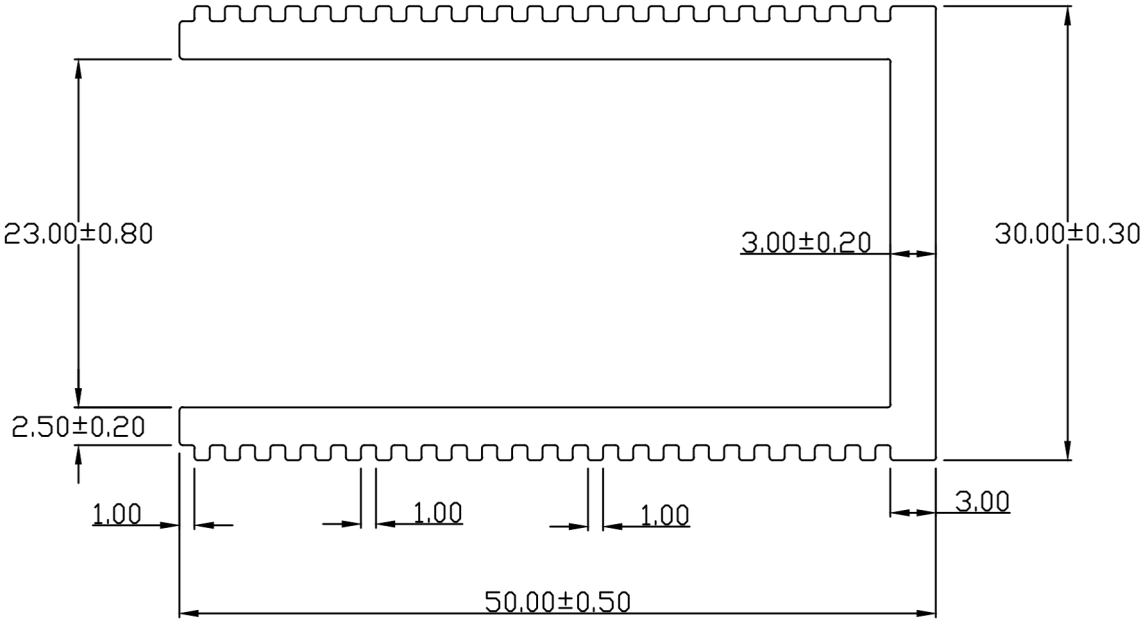

WITH DIN ISO 2768-1 class C = Coarse

Dimension	0.5 - 33 - 6	6 - 30	30-120	120-400
Longitudional	±0.2 ±0.4	±0.3	±0.5	±0.8	±1.2
Degree	0.5 - 33 - 6	6 - 30	30-120	±0°15°
Radius & Chamfer	±1.0 at 10	10-50	50-120120-400over 400	

NOTE:- ALL DIMENSIONS ARE IN mm.

AREA:- 370.9657 Sqmm^	ALLOY/TEMPER:- 6063 T6	
EX PERIMETER:- 329.1752 MM	FLATNESS:-±0.9mm^	
WEIGHT:- 1.001 Kg/m	TOLERANCES:	PARTY NAME:-
DESCRIPTION:-	ANGULARITY:-±1.4°	
PARTY DRG. No.:-	straightness:-1.50mm/meter	APPROVED BY:-
SECTION NO:- NP-154	TWIST:-2.50mm/meter	SCALE:- 2:1

Global Solutions For Aluminium Extrusions

SCALE:- 1:1

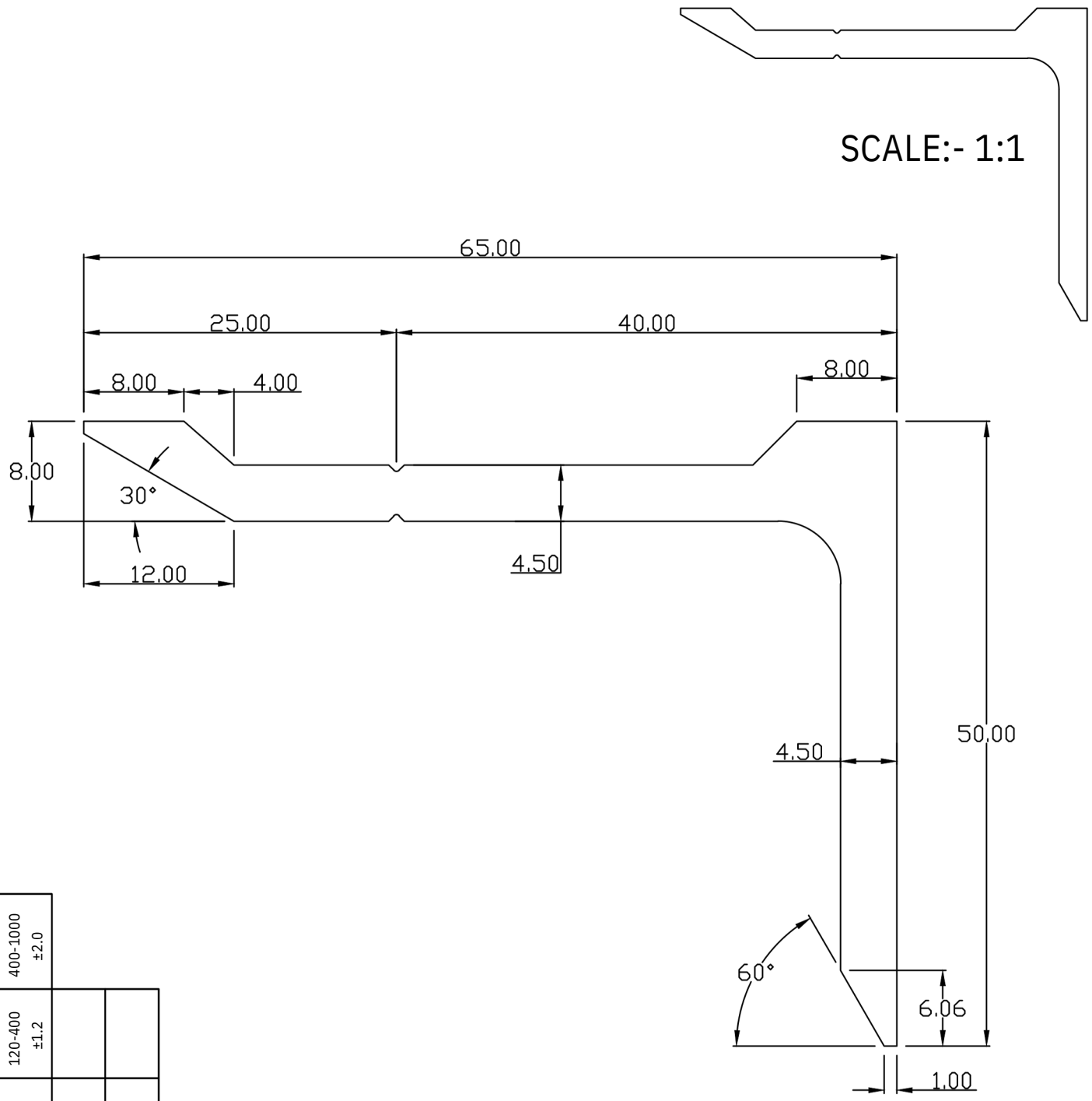

NOTE:- UNSPECIFIED RADIOUS ARE 0.3 mm.
NOTE:- ALL DIMENSIONS ARE IN mm.

UNSPECIFIED TOLERANCES WILL BE IN ACCORDANCE WITH DIN ISO 2768-1 class C = Coarse

Dimension	0.5 - 33 - 6	6 - 30	30-120	120-400	400-1000
Longitudional	±0.2 ±0.4	±0.3	±0.5 ±1°	±0.8 ±2.0	±1.2 ±3°	±2.0 ±6°
Radius & Chamfer	0.5 - 33 - 6	6 - 30	30-120	over 400		
	±1.0	±2.0 ±1°	±0.8 ±0.8			
	at 10	10-50	50-120	120-400		

AREA:- 502.6405 Sqmm^	ALLOY/TEMPER:- 6061 T6	
EX PERIMETER:- 223.7259 MM	FLATNESS:-±0.8mm^	
WEIGHT:- 1.3571 Kg/Mtr.	TOLERANCES:	
DESCRIPTION:- RK 50	ANGULARITY:-±2°	CHECKED BY:-
PARTY DRG NO:-	straightness:-1.70meter	APPROVED BY:-
SECTION NO:- NP-77	TWIST:-1.70mm/meter	SCALE:- 2:1

Global Solutions For Aluminium Extrusions

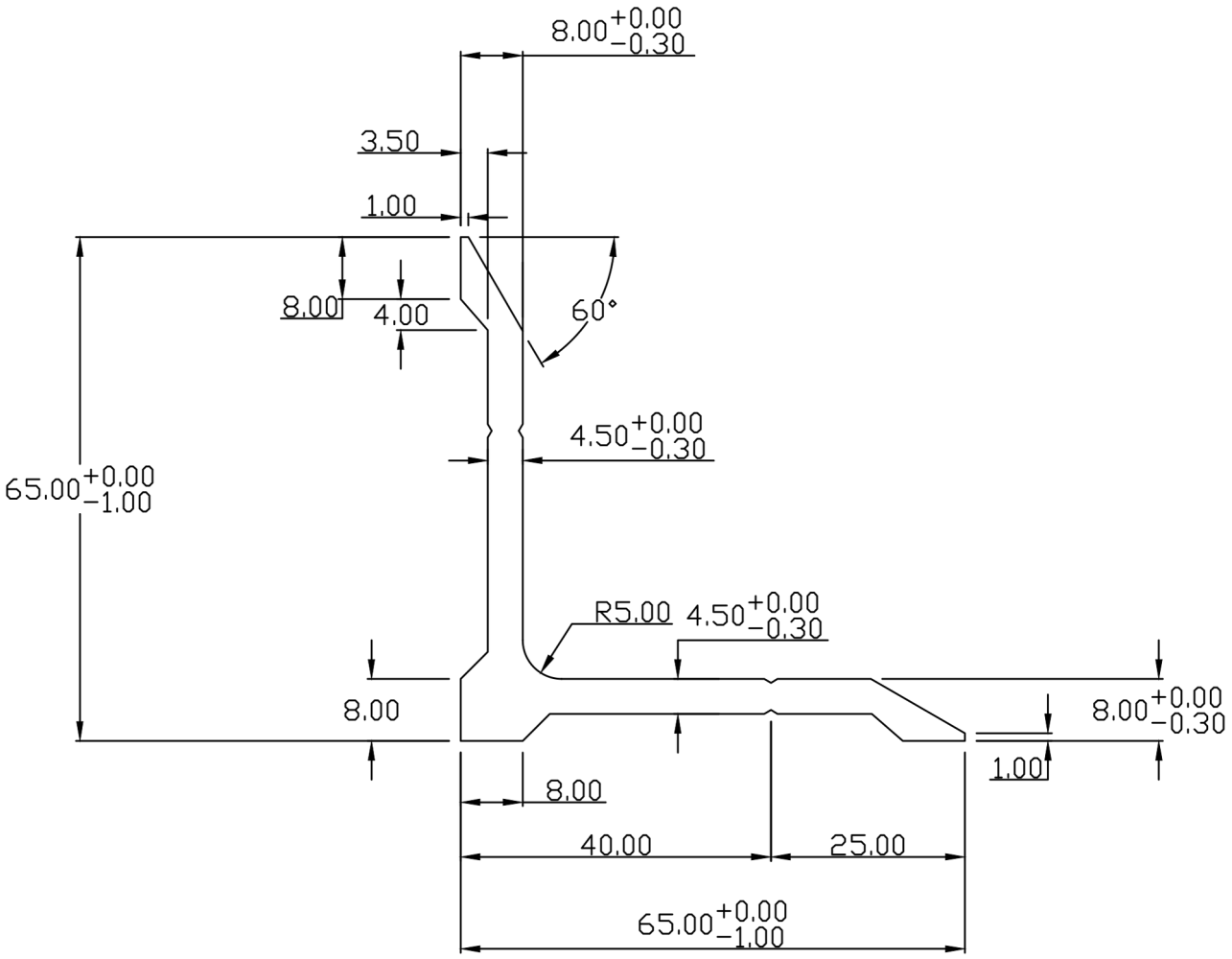

UNSPECIFIED TOLERANCES WILL BE IN ACCORDANCE WITH DIN ISO 2768-1 class C = Coarse

Dimension	0.5 - 33 - 6	6 - 30	30-120	120-400	400-1000
Longitudional	±0.2	±0.5	±0.8	±1.2	±2.0
Radius & Chamfer	±0.4	±0.3			
Minutes	0.5 - 33 - 6	6 - 30	30-120		
Degrees	±1.0 at 10	10-50	50-120	120-400	over 400
		±1°	±0.8		
		±0°30'	±0°15'		

NOTE:- UNSPECIFIED RADIOUS ARE 0.3 mm.
NOTE:- ALL DIMENSIONS ARE IN mm.

AREA:- 578.0125 Sqmm^	ALLOY/TEMPER:- 6061 T6	
EX PERIMETER:- 263.0770 MM	FLATNESS:-±0.8mm^	
WEIGHT:- 1.560 Kg/Mtr.	TOLERANCES:	
DESCRIPTION:- ECA SECTION	ANGULARITY:-±2°	CHECKED BY:-
PARTY DRG NO:-	straightness:-1.70meter	APPROVED BY:-
SECTION NO:- NP-52	TWIST:-1.70mm/meter	SCALE:- 1:1

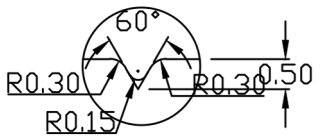

DETAIL:- A
SCALE:- 5:1

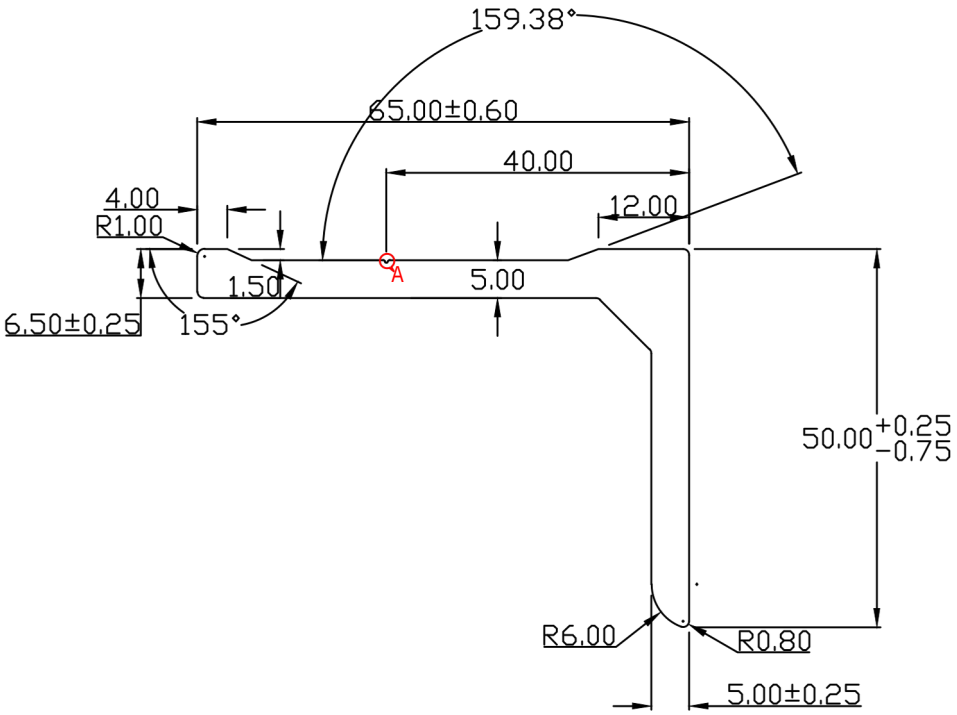

WITH DIN ISO 2768-1 class C = Coarse							
Dimension Longitudional	0.5 - 33 - 6 ±0.2 ±0.4	±0.3	6 - 30 ±0.5	30-120 ±0.8	120-400 ±1.2		
Degree Radius & Chamfer	0.5 - 33 - 6		6 - 30 ±2.0	30-120 ±0.8	±0°15°		
	±1.0 at 10	10-50	50-120120-400over 400				

NOTE:- ALL DIMENSIONS ARE IN mm.

AREA:- 589.4493 Sqmm^	ALLOY/TEMPER:- 6061 T6	
EX PERIMETER:- 222.9924 MM	FLATNESS:-±0.9mm^	
WEIGHT:- 1.591 Kg/m	TOLERANCES:	
DESCRIPTION:-	ANGULARITY:-±1.0°	(M) No.:-
PARTY DRG. No.:-	straightness:-±1.0mm/meter	APPROVED BY:-
SECTION NO:- NP-159	TWIST:-±1.0mm/meter	SCALE:- 1:1

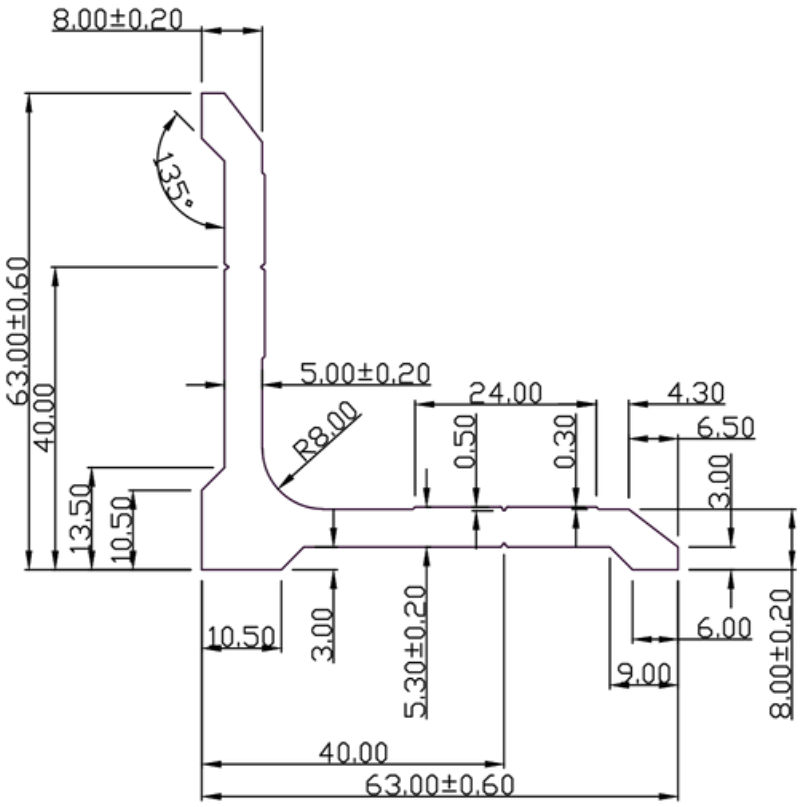

WITH DIN ISO 2768-1 class C = Coarse							
Dimension Longitudional	0.5 - 33 - 6 ±0.2 ±0.4	±0.3	6 - 30 ±0.5	30-120 ±0.8	120-400 ±1.2		
Degree & Chamfer	0.5 - 33 - 6		6 - 30 ±2.0	30-120 ±0.8	±0°15°		
Radius	±1.0 at 10	10-50	50-120120-400over 400				

NOTE:- ALL DIMENSIONS ARE IN mm.

AREA:- 677.8617 Sqmm^	ALLOY/TEMPER:- 6061 T6	
EX PERIMETER:- 249.3576 MM	FLATNESS:-±0.45mm^	
WEIGHT:- 1.8302 Kg/Mtr.	TOLERANCES:	
DESCRIPTION:-	ANGULARITY:-±1.0°	(M) No.:-
PARTY DRG. No.:-	straightness:-1.00mm/meter	APPROVED BY:-
SECTION NO:- NP-404	TWIST:-1.00mm/meter	SCALE:- 1:1

Global Solutions For Aluminium Extrusions

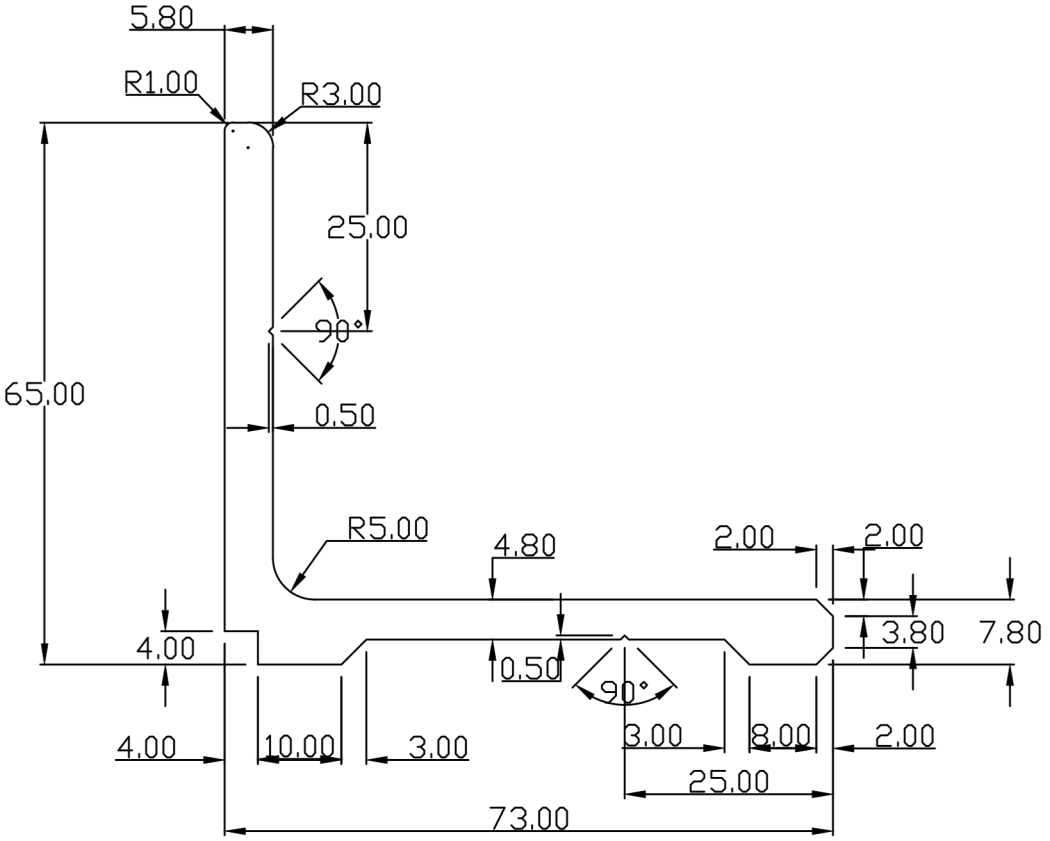

WITH DIN ISO 2768-1 class C = Coarse							
Dimension Longitudional	0.5 - 33 - 6 ±0.2 ±0.4	±0.3	6 - 30 ±0.5	30-120 ±0.8	120-400 ±1.2		
Degree Radius & Chamfer	0.5 - 33 - 6		6 - 30 ±2.0	30-120 ±0.8	±0°15°		
	±1.0 at 10	10-50	50-120120-400over 400				

NOTE:- ALL DIMENSIONS ARE IN mm.

AREA:- 745.8790 Sqmm^	ALLOY/TEMPER:- 6061 T6	
EX PERIMETER:- 273.1077 MM	FLATNESS:-±1.0mm^	DATE:-
WEIGHT:- 7.370 Kg/12'	TOLERANCES:	PARTY NAME:-
DESCRIPTION:-	ANGULARITY:-±1.0°	(M) No.:-
PARTY DRG. No.:-	straightness:-1.00mm/meter	APPROVED BY:-
SECTION NO:- NP-262	TWIST:-1.00mm/meter	SCALE:- 1:1

Global Solutions For Aluminium Extrusions

SCALE:- 1:1

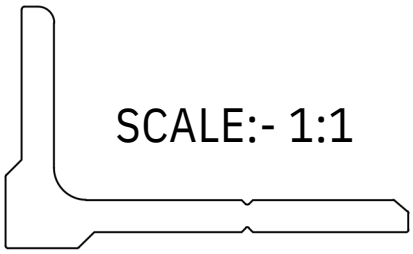

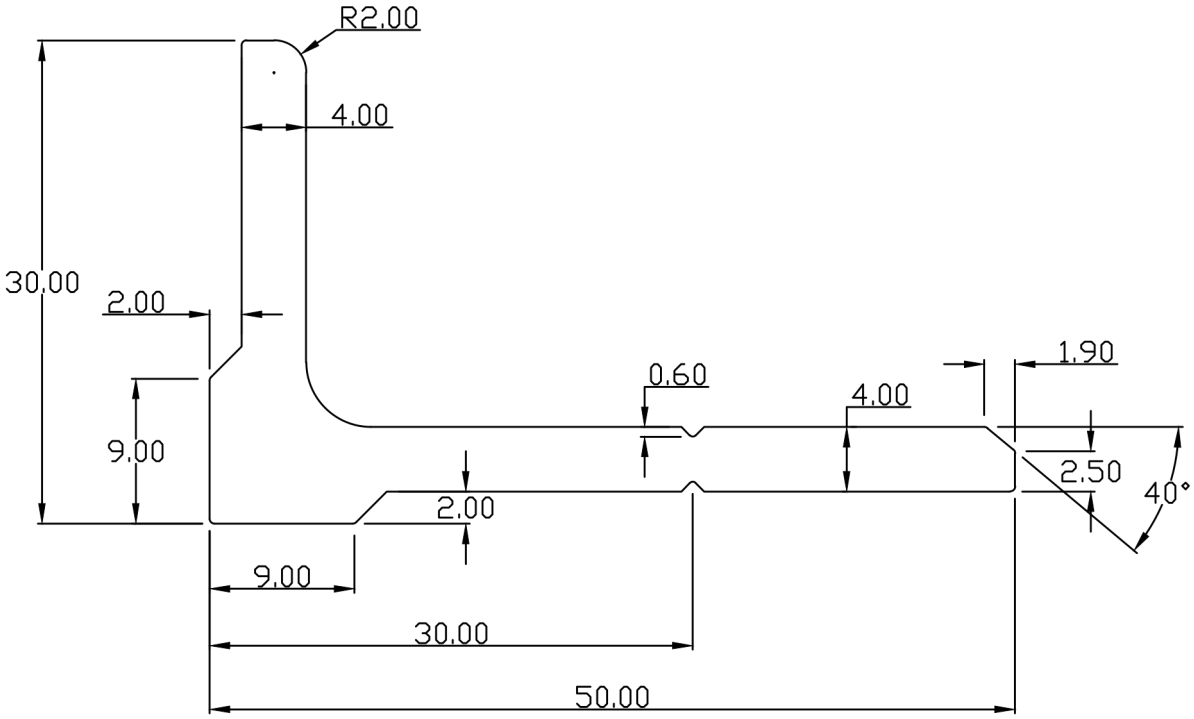

UNSPECIFIED TOLERANCES WILL BE IN ACCORDANCE WITH DIN ISO 2768-1 class C= Coarse

Dimension Longitudinal	0.5 - 33 - 6 ±0.2 ±0.4	6 - 30 ±0.5	30-120 ±0.8	120-400 ±1.2	400-1000 ±2.0
Dimension Longitudinal	±0.3				
Dimension Longitudinal		6 - 30 ±2.0	30-120 ±0.8		
Dimension Longitudinal			over 400		
Dimension Longitudinal	0.5 - 33 - 6	±1°			
Dimension Longitudinal		10-50	50-120	120-400	
Dimension Longitudinal	±1.0 at 10				
Dimension Longitudinal		±0°30'	±0°15'		

Minutes & Seconds & Decimal Diameter

NOTE:- UNSPECIFIED RADIOUS ARE 0.3 mm.
NOTE:- ALL DIMENSIONS ARE IN mm.

AREA:- 324.1962 Sqmm^	ALLOY/TEMPER:- 6061 T6	
EX PERIMETER:- 154.6367 MM	FLATNESS:-±0.8mm^	
WEIGHT:- 0.875 Kg/Mtr.	TOLERANCES:	
DESCRIPTION:-	ANGULARITY:-±2°	CHECKED BY:-
PARTY DRG NO:-	straightness:-1.70meter	APPROVED BY:-
SECTION NO:- NP-49	TWIST:-1.70mm/meter	SCALE:- 2:1

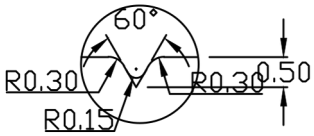

DETAIL:- A
SCALE:- 5:1

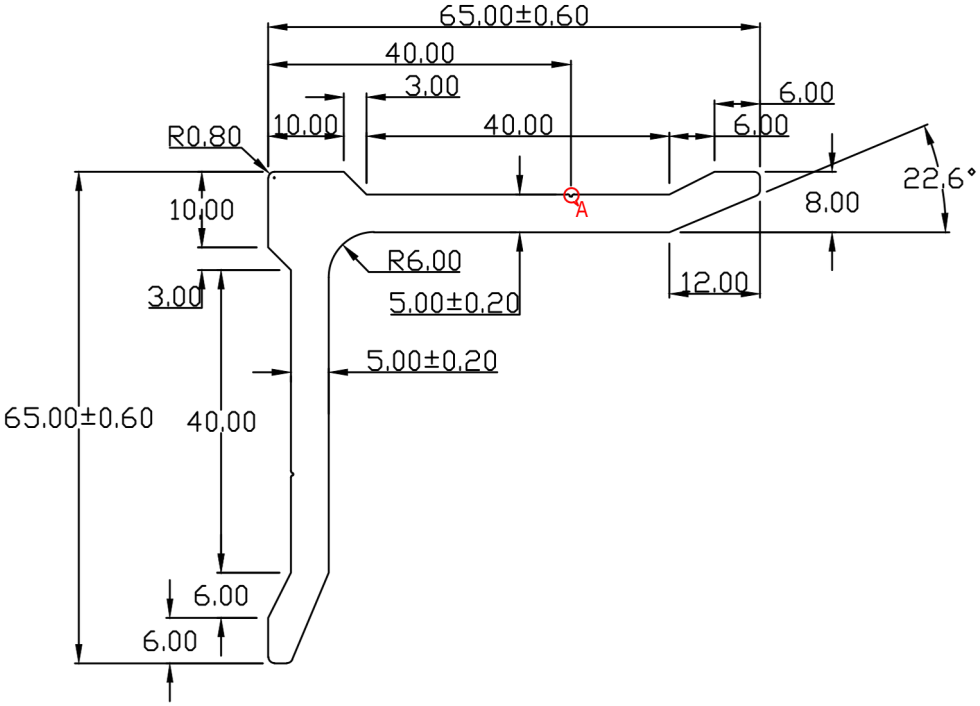

WITH DIN ISO 2768-1 class C = Coarse							
Dimension Longitudional	0.5 - 33 - 6 ±0.2 ±0.4	±0.3	6 - 30 ±0.5	30-120 ±0.8	120-400 ±1.2		
Degree Radius & Chamfer	0.5 - 33 - 6		6 - 30 ±2.0	30-120 ±0.8	±0°15°		
	±1.0 at 10	10-50	50-120120-400over 400				

NOTE:- ALL DIMENSIONS ARE IN mm.

AREA:- 655.9357 Sqmm^	ALLOY/TEMPER:- 6061 T6	
EX PERIMETER:- 252.6594 MM	FLATNESS:-±0.9mm^	
WEIGHT:- 1.771 Kg/m	TOLERANCES:	
DESCRIPTION:-	ANGULARITY:-±1.0°	(M) No.:-
PARTY DRG. No.:-	straightness:-±1.0mm/meter	APPROVED BY:-
SECTION NO:- NP-158	TWIST:-±1.0mm/meter	SCALE:- 1:1

Global Solutions For Aluminium Extrusions

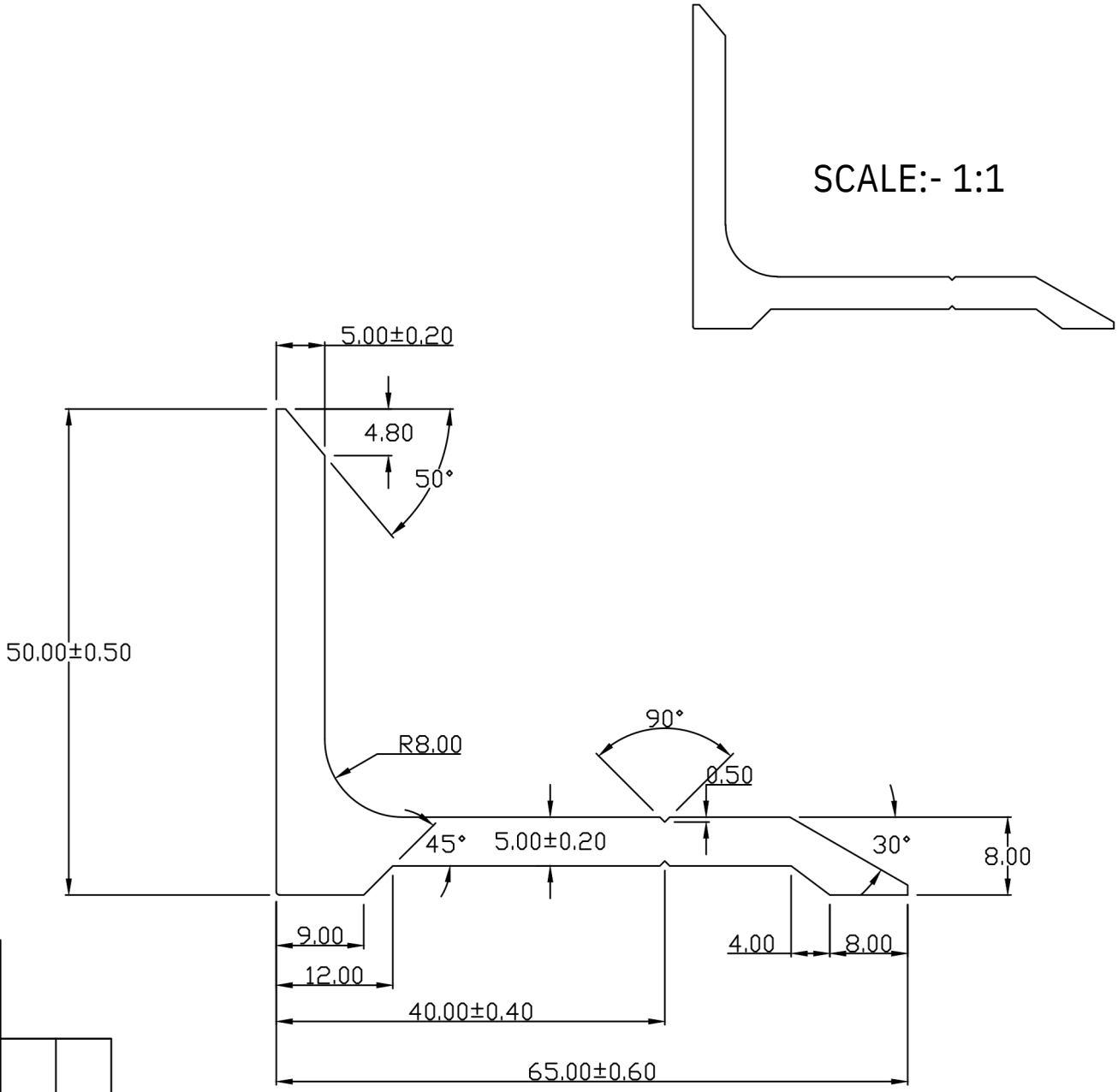

UNSPECIFIED TOLERANCES WILL BE IN ACCORDANCE WITH DIN ISO 2768-1 class C - Coarse

Dimension	0.5 - 33 - 6	6 - 30	30-120	120-400	400-1000
Longitudional	±0.2 ±0.4	±0.5	±0.8	±1.2	±2.0
Radius & Diameter	±0.3	0.5 - 33 - 6 ±2.0 ±1°	30-120 ±0.8		
Minutes & Degrees	10-50	50-120	120-400	over 400	
	±1.0 at 10	±0°30'	±0°15'		

NOTE:- UNSPECIFIED RADIUS:- 0.30 mm.
NOTE:- ALL DIMENSIONS ARE IN mm.

AREA:- 557.6135 Sqmm^	ALLOY/TEMPER:- 6061 T6	
EX PERIMETER:- 221.8226 MM	FLATNESS:-±0.7mm^	
WEIGHT:- 5.510 Kg/12'	TOLERANCES:	
DESCRIPTION:- AS PER DRAWING	ANGULARITY:-±1°	
PARTY DRG NO:- 1645	straightness:-1.50meter	APPROVED BY:-
SECTION NO:- NP-121	TWIST:-1.50mm/meter	SCALE:- 1.5:1

Global Solutions For Aluminium Extrusions

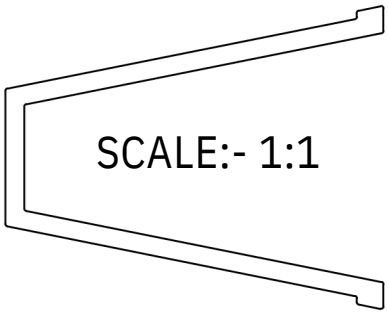

SCALE:- 1:1

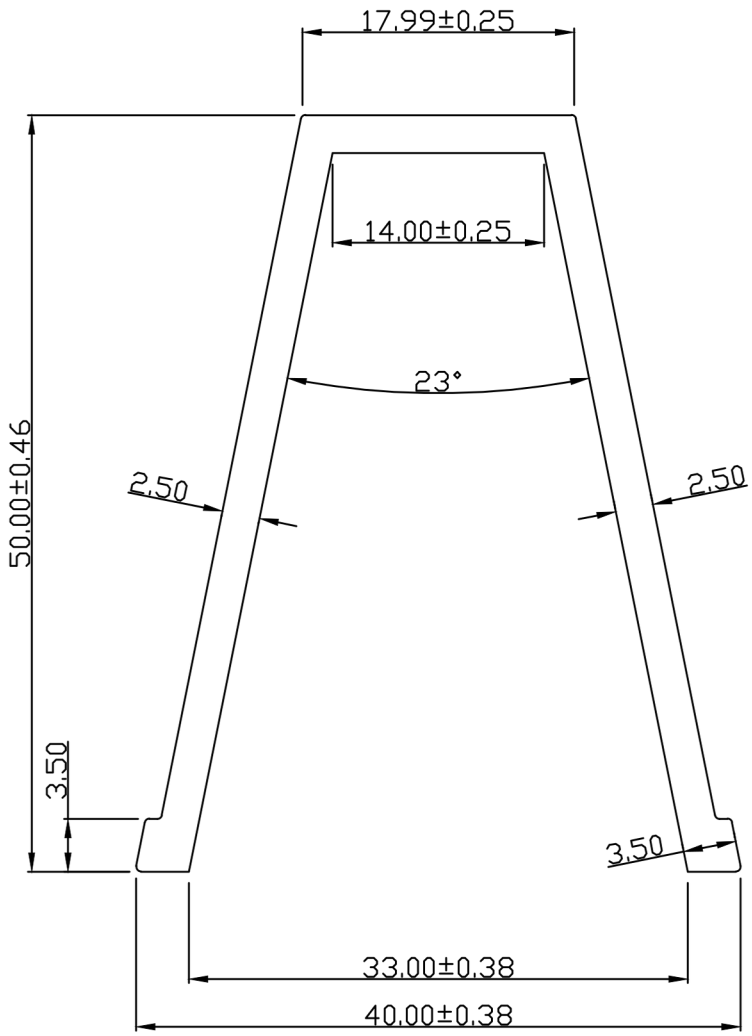

UNSPECIFIED TOLERANCES WILL BE IN ACCORDANCE WITH DIN ISO 2768-1 class C= Coarse									
Dimension Longitudional	0.5 - 33 - 6 ±0.2 ±0.4	±0.3	6 - 30 ±1° ±0.5	30-120 ±0.8	120-400 ±1.2	400-1000 ±2.0			
Degree & Minutes	0.5 - 33 - 6		6 - 30 ±2.0 ±1°	30-120 ±0.8					
Radius & Chamfer	±1.0 at 10	10-50	50-120	120-400	over 400				

±2°30'
±1°15'

NOTE:- UNSPECIFIED CORNER RADIOUS ARE 0.50 mm.
NOTE:- ALL DIMENSIONS ARE IN mm.

AREA:- 295.7489 Sqmm^	ALLOY/TEMPER:- 6063 T6	
EX PERIMETER:- 238.9169 MM	FLATNESS:-±0.8mm^	
WEIGHT:- 2.9225 Kg/12'	TOLERANCES:	
DESCRIPTION:- AS PER DRAWING	ANGULARITY:-±2°	(M) No.:-
PARTY DRG:-	straightness:-1.70meter	APPROVED BY:-
SECTION NO:- N-2889	TWIST:-1.70mm/meter	SCALE:- 2:1

Global Solutions For Aluminium Extrusions

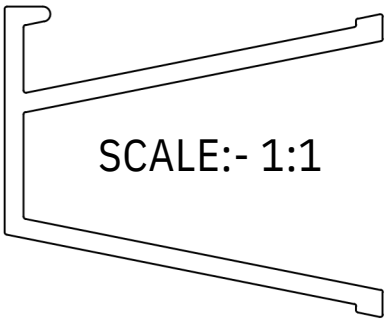

SCALE:- 1:1

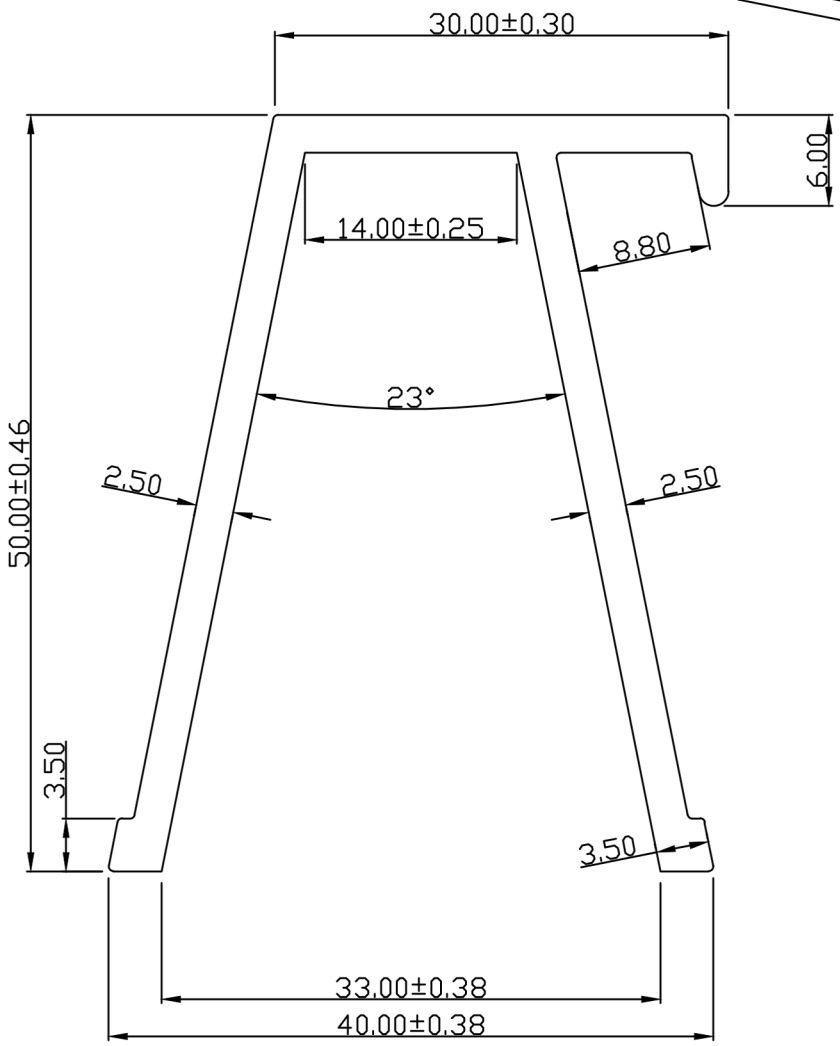

Dimension	0.5 - 33 - 6	6 - 30	30-120	120-400	400-1000
Longitudional	±0.2	±0.5	±0.8	±1.2	±2.0
Degree	±0.4	±1°	±1°		
Radius & Chamfer	±0.3				
Minutes	0.5 - 33 - 6	6 - 30	30-120		
		±2.0	±0.8		
	10-50	50-120	120-400	over 400	
	±1.0 at 10				

WITH DIN ISO 2768-1 class C= Coarse
UNSPECIFIED TOLERANCES WILL BE IN ACCORDANCE

±2°30°
±1°15°

NOTE:- UNSPECIFIED CORNER RADIOUS ARE 0.50 mm.
NOTE:- ALL DIMENSIONS ARE IN mm.

AREA:- 332.1805 Sqmm^	ALLOY/TEMPER:- 6063 T6	
EX PERIMETER:- 267.6389 MM	FLATNESS:-±0.8mm^	
WEIGHT:- 3.2826 Kg/12'	TOLERANCES:	
DESCRIPTION:- AS PER DRAWING	ANGULARITY:-±2°	(M) No.:-
PARTY DRG:-	straightness:-1.70meter	APPROVED BY:-
SECTION NO:- N-2890	TWIST:-1.70mm/meter	SCALE:- 2:1

Global Solutions For Aluminium Extrusions

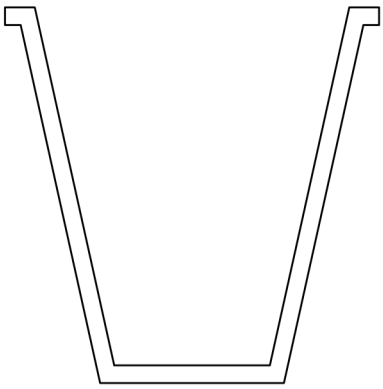

SCALE:- 1:1

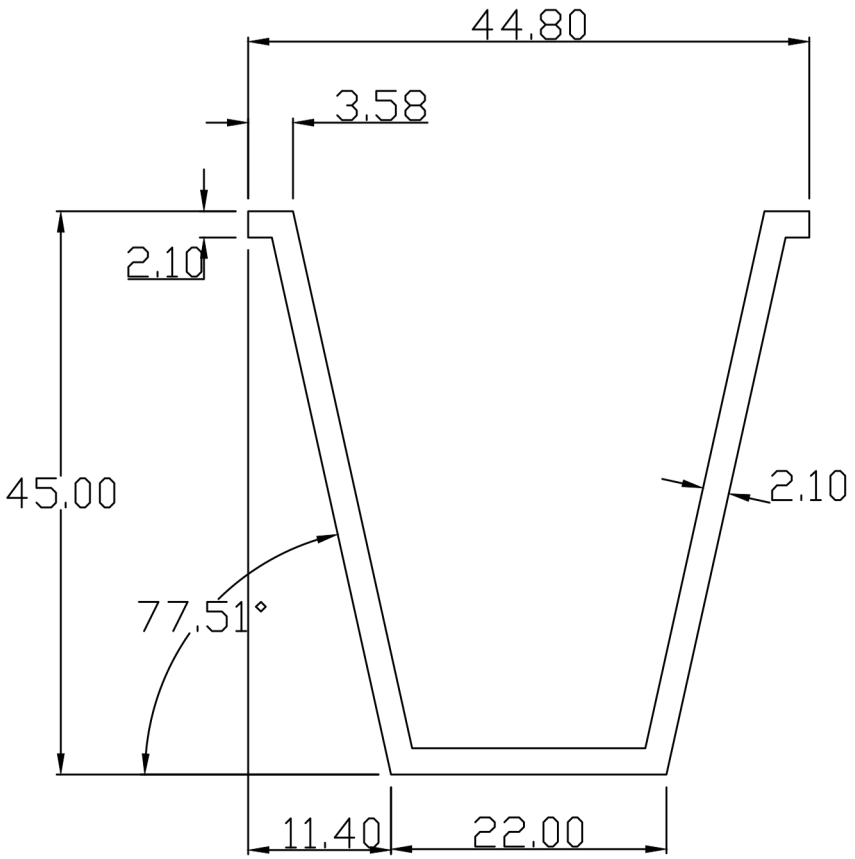

WITH DIN ISO 2768-1 class C = Coarse							
Dimension Longitudional	0.5 - 33 - 6 ±0.2 ±0.4	±0.3	6 - 30 ±0.5	30-120 ±0.8	120-400 ±1.2		
Degree & chamfer	0.5 - 33 - 6		6 - 30 ±2.0	30-120 ±0.8	±0°15°		
	±1.0 at 10	10-50	50-120120-400over 400				

NOTE:- ALL DIMENSIONS ARE IN mm.

NATIONAL INDUSTRIES, SURAT

AREA:- 238.7156 Sqmm^	ALLOY/TEMPER:- 6061 T6	
EX PERIMETER:- 231.5482 MM	FLATNESS:-±1.0mm^	DATE:-
WEIGHT:- 2.359 Kg/12'	TOLERANCES:	PARTY NAME:-
DESCRIPTION:-	ANGULARITY:-±1.0°	(M) No.:-
PARTY DRG. No.:-	straightness:-1.00mm/meter	APPROVED BY:-
SECTION NO:- NP-261	TWIST:-1.00mm/meter	SCALE:- 1.5:1

Global Solutions For Aluminium Extrusions

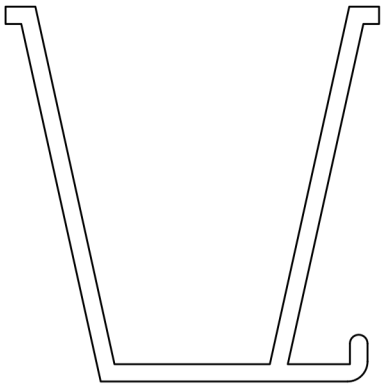

SCALE:- 1:1

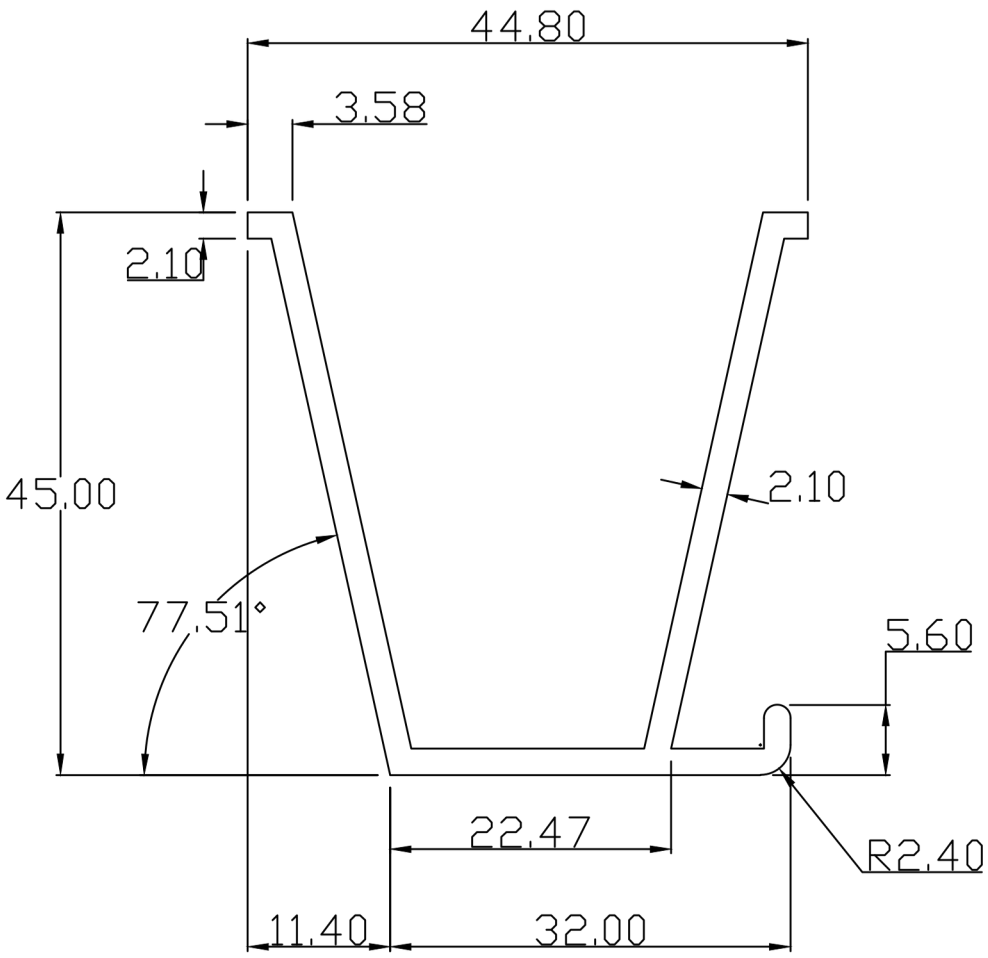

WITH DIN ISO 2768-1 class C = Coarse						
Dimension Longitudional	0.5 - 33 - 6 ±0.2	±0.3	6 - 30 ±0.5	30-120 ±0.8	120-400 ±1.2	
Degree & Chamfer	0.5 - 33 - 6 ±0.4	±1.0	6 - 30 ±2.0	30-120 ±0.8	±0°15°	
	at 10	10-50	50-120120-400over 400			

NOTE:- ALL DIMENSIONS ARE IN mm.

NATIONAL INDUSTRIES, SURAT

AREA:- 264.8679 Sqmm^	ALLOY/TEMPER:- 6061 T6	
EX PERIMETER:- 256.1007 MM	FLATNESS:-±1.0mm^	DATE:-
WEIGHT:- 2.617 Kg/12'	TOLERANCES:	PARTY NAME:-
DESCRIPTION:-	ANGULARITY:-±1.0°	(M) No.:-
PARTY DRG. No.:-	straightness:-1.00mm/meter	APPROVED BY:-
SECTION NO:- NP-260	TWIST:-1.00mm/meter	SCALE:- 1.5:1

Global Solutions For Aluminium Extrusions

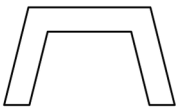

SCALE:- 1:1

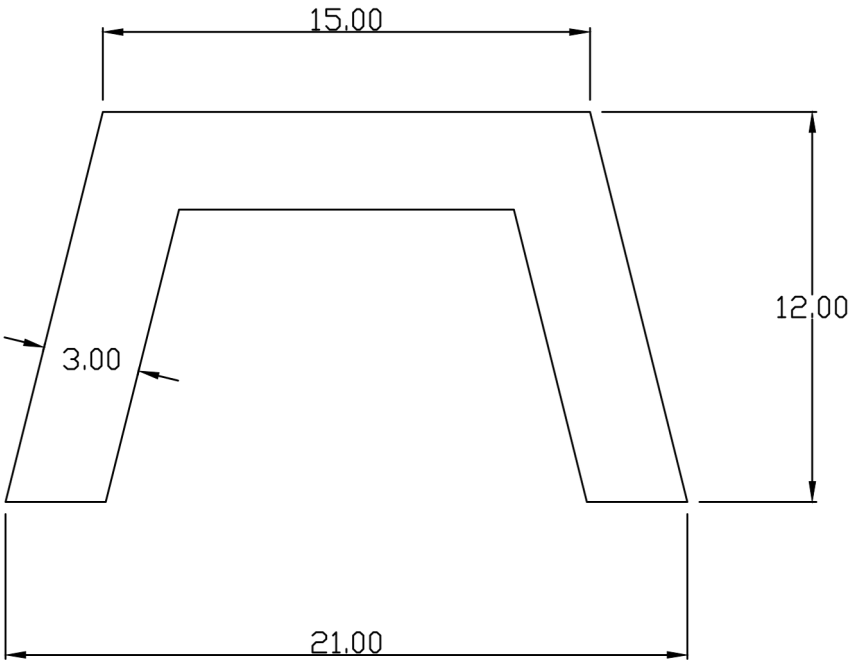

UNSPECIFIED TOLERANCES WILL BE IN ACCORDANCE WITH DIN ISO 2768-1 class C – Coarse

Dimension Longitudional	0.5 - 33 - 6		6 - 30	30-120	120-400	400-1000
	±0.2 ±0.4	±0.3	±0.5	±0.8	±1.2	±2.0
Minutes & Degrees	0.5 - 33 - 6		6 - 30 ±1°	30-120 ±0.8		
Radius & Chamfer	±1.0 at 10	10-505	0-120	120-400	over 400	

±30°
±15°

NOTE:- UNSPECIFIED RADIOUS ARE 0.3 mm.
NOTE:- ALL DIMENSIONS ARE IN mm.

AREA:- 102.9119 Sqmm^	ALLOY/TEMPER:- 6061 T6	
EX PERIMETER:- 74.7926 MM	FLATNESS:-±0.8mm^	
WEIGHT:- 0.277 Kg/Mtr.	TOLERANCES:	
DESCRIPTION:- DRIP MOULD	ANGULARITY:-±2°	CHECKED BY:-
PARTY DRG NO:-	straightness:-1.70meter	APPROVED BY:-
SECTION NO:- NP-44	TWIST:-1.70mm/meter	SCALE:- 4:1

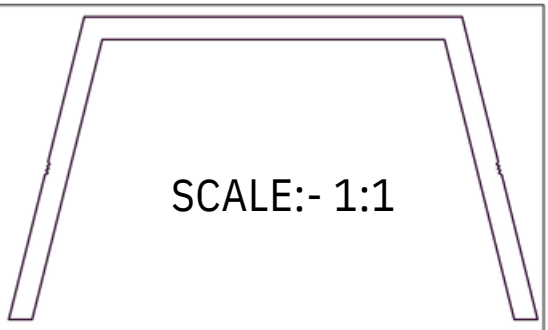

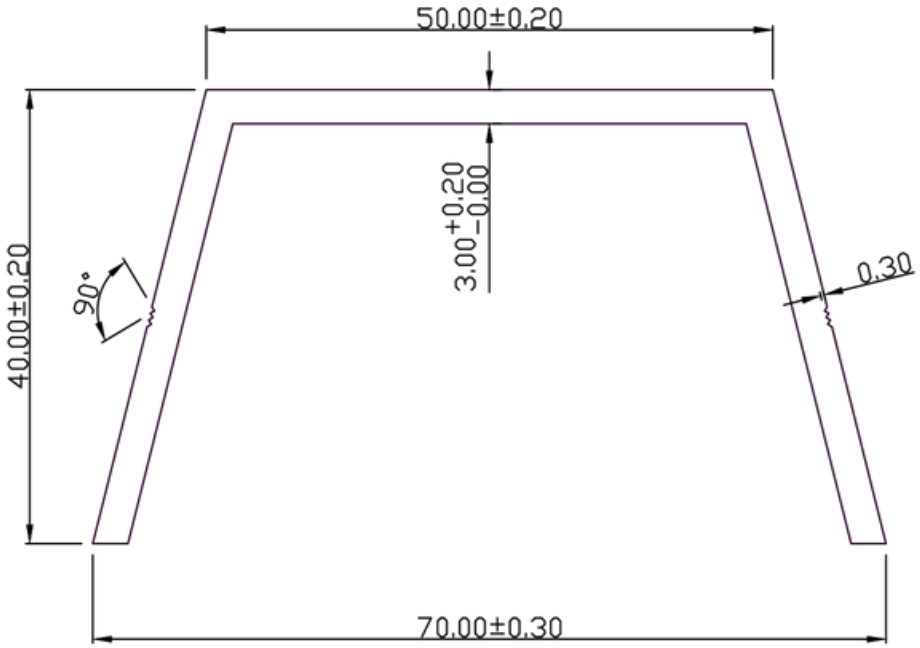

Dimension	0.5 - 33 - 6	6 - 30	30-120	120-400
Longitudional	±0.2 ±0.4	±0.5	±0.8	±1.2
Degree & Chamfer	0.5 - 33 - 6	6 - 30	30-120	±0°15°
		±2.0	±0.8	
		10-50	50-120120-400over 400	
		±1.0 at 10		

WITH DIN ISO 2768-1 class C = Coarse

NOTE:- ALL DIMENSIONS ARE IN mm.

AREA:- 380.5424 Sqmm^	ALLOY/TEMPER:- 6061 T6	
EX PERIMETER:- 261.7307 MM	FLATNESS:-±0.9mm^	
WEIGHT:- 1.0274 Kg/Mtr.	TOLERANCES:	
DESCRIPTION:-	ANGULARITY:-±1.4°	(M) No.:-
PARTY DRG. No.:-	straightness:-1.50mm/meter	APPROVED BY:-
SECTION NO:- NP-390	TWIST:-1.70mm/meter	SCALE:- 1.5:1

Global Solutions For Aluminium Extrusions

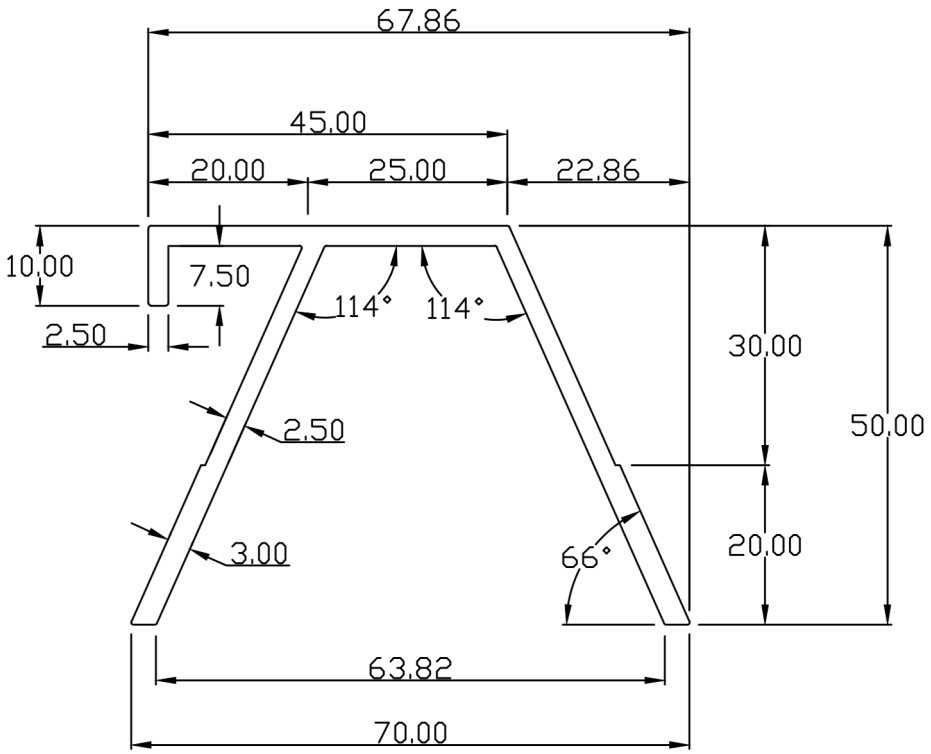

UNSPECIFIED TOLERANCES WILL BE IN ACCORDANCE WITH DIN ISO 2768-1 class C = Coarse									
Dimension Longitudional	0.5 - 33 - 6 ±0.2 ±0.4	±0.3	6 - 30 ±1° ±0.5	30-120 ±0.8	120-400 ±1.2	400-1000 ±2.0			
Radius & Chamfer	0.5 - 33 - 6		6 - 30 ±2.0 ±1°	30-120 ±0.8					
Minutes		10-505	120-400	over 400					
	±1.0 at 10								

±30°
±0°15°

NOTE:- UNSPECIFIED RADIOUS ARE 0.3 mm.
NOTE:- ALL DIMENSIONS ARE IN mm.

AREA:- 414.9296 Sqmm^	ALLOY/TEMPER:- 6061 T6	
EX PERIMETER:- 320.3586 MM	FLATNESS:-±0.8mm^	
WEIGHT:- 1.120 Kg/Mtr.	TOLERANCES:	
DESCRIPTION:- WALL STIFFNER WITH LIP	ANGULARITY:-±2°	CHECKED BY:-
PARTY DRG NO:-	straightness:-1.70meter	APPROVED BY:-
SECTION NO:- NP-50	TWIST:-1.70mm/meter	SCALE:- 1:1

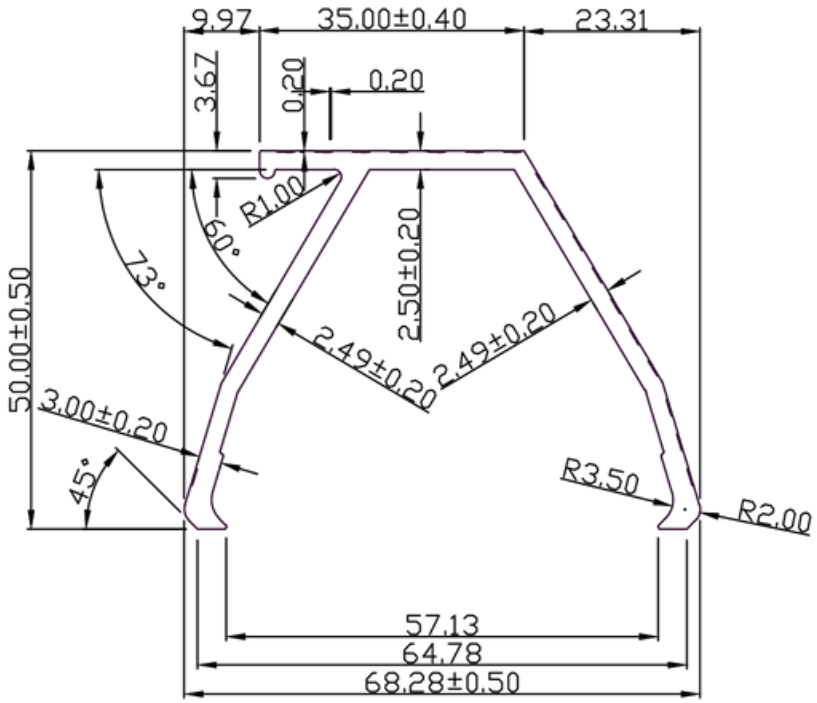

WITH DIN ISO 2768-1 class C = Coarse							
Dimension Longitudional	0.5 - 33 - 6 ±0.2 ±0.4	±0.3	6 - 30 ±0.5	30-120 ±0.8	120-400 ±1.2		
Degree & Chamfer	0.5 - 33 - 6		6 - 30 ±2.0	30-120 ±0.8	±0°15°		
Radius		10-50	50-120120-400over 400				
	±1.0 at 10						

NOTE:- ALL DIMENSIONS ARE IN mm.

AREA:- 367.7533 Sqmm^	ALLOY/TEMPER:- 6061 T6	
EX PERIMETER:- 346.0567 MM	FLATNESS:-±0.45mm^	
WEIGHT:- 0.9929 Kg/Mtr.	TOLERANCES:	
DESCRIPTION:-	ANGULARITY:-±1.0°	(M) No.:-
	straightness:-1.00mm/meter	APPROVED BY:-
SECTION NO:- NP-408	TWIST:-1.00mm/meter	SCALE:- 1:1

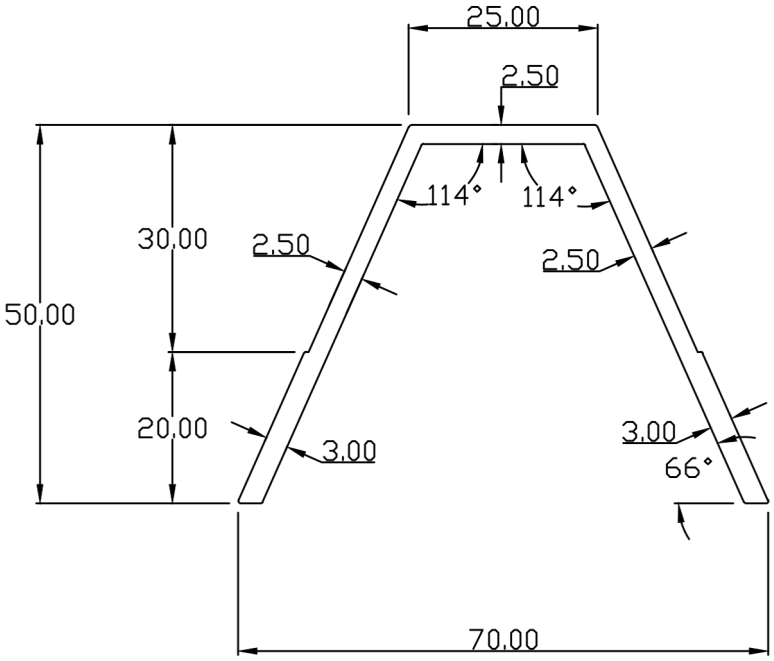

UNSPECIFIED TOLERANCES WILL BE IN ACCORDANCE WITH DIN ISO 2768-1 class C = Coarse

Dimension	0.5 - 6	6 - 30	30-120	120-400	400-1000
Longitudional	±0.2	±0.5	±0.8	±1.2	±2.0
Angular	±0.4	±1°	±0.8		
Radius & Chamfer	±0.3	±0.3	±0.3		
Mould Radius	0.5 - 33 - 6	6 - 30	30-120		
		±2.0			
		±1°			
	10-50	50-120	120-400	over 400	
	±1.0	±0.5	±0.3		
	at 10	±0.15°	±0.30°		

NOTE:- UNSPECIFIED RADIUS:- 0.30 mm.
NOTE:- ALL DIMENSIONS ARE IN mm.

AREA:- 346.2695 Sqmm^	ALLOY/TEMPER:- 6061 T6	
EX PERIMETER:- 266.2170 MM	FLATNESS:-±0.7mm^	
WEIGHT:- 3.421 Kg/12'	TOLERANCES:	
DESCRIPTION:- AS PER DRAWING	ANGULARITY:-±1°	
PARTY DRG NO:- 1830	straightness:-1.50meter	APPROVED BY:-
SECTION NO:- NP-120	TWIST:-1.50mm/meter	SCALE:- 1:1

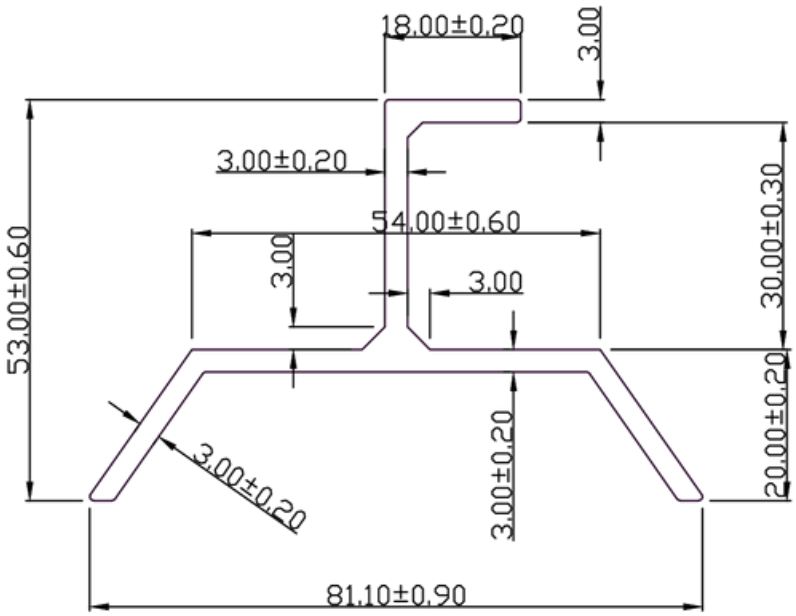

Dimension Longitudional	0.5 - 33 - 6 ±0.2 ±0.4	±0.3	6 - 30 ±0.5	30-120 ±0.8	120-400 ±1.2
Degree & Chamfer	0.5 - 33 - 6		6 - 30 ±2.0	30-120 ±0.8	±0°15°
Radius	±1.0 at 10	10-50	50-120120-400over 400		

WITH DIN ISO 2768-1 class C = Coarse

NOTE:- ALL DIMENSIONS ARE IN mm.

AREA:- 447.2669 Sqmm^	ALLOY/TEMPER:- 6061 T6	
EX PERIMETER:- 291.4011 MM	FLATNESS:-±0.45mm^	
WEIGHT:- 1.2076 Kg/Mtr.	TOLERANCES:	
DESCRIPTION:-	ANGULARITY:-±1.0°	(M) No.:-
PARTY DRG. No.:- STIFFENER	straightness:-1.00mm/meter	APPROVED BY:-
SECTION NO:- NP-406	TWIST:-1.00mm/meter	SCALE:- 1:1

Global Solutions For Aluminium Extrusions

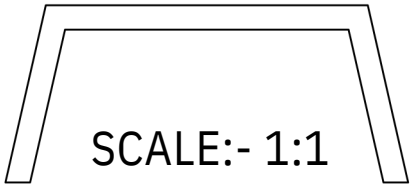

SCALE:- 1:1

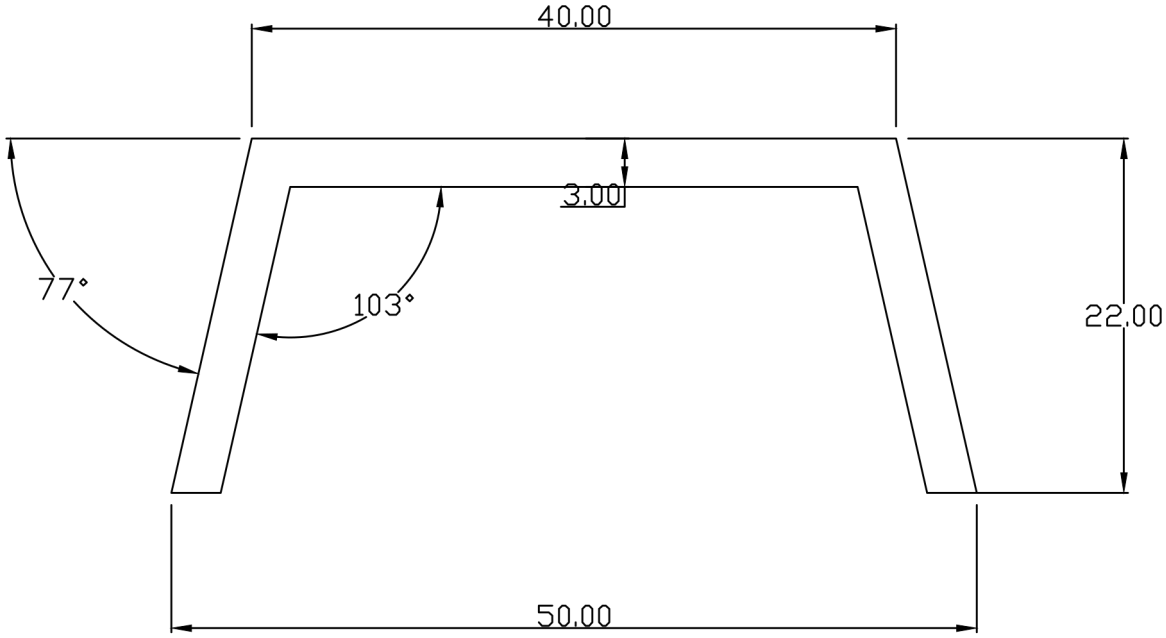

UNSPECIFIED TOLERANCES WILL BE IN ACCORDANCE WITH DIN ISO 2768-1 class C - Coarse

Dimension	0.5 - 33 - 6	6 - 30	30-120	120-400	400-1000
Longitudional	±0.2	±0.5	±0.8	±1.2	±2.0
Radius & Chamfer	±0.4	±1°	±1°		
Minutes					

	0.5 - 33 - 6	6 - 30	30-120	over 400
Radius & Chamfer	±0.3	±2.0	±0.8	
Minutes	±1.0	±0°30'	±0°15'	
	at 10	10-505	120-400	

NOTE:- ALL DIMENSIONS ARE IN mm.

AREA:- 238.9526 Sqmm^	ALLOY/TEMPER:- 6061 T6	
EX PERIMETER:- 165.4547 MM	FLATNESS:-±0.8mm^	
WEIGHT:- 0.645 Kg/Mtr.	TOLERANCES:	
DESCRIPTION:- U STIFFENER	ANGULARITY:-±2°	CHECKED BY:-
PARTY DRG NO:-	straightness:-1.70meter	APPROVED BY:-
SECTION NO:- NP-51	TWIST:-1.70mm/meter	SCALE:- 2:1

Global Solutions For Aluminium Extrusions

SCALE:- 1:1

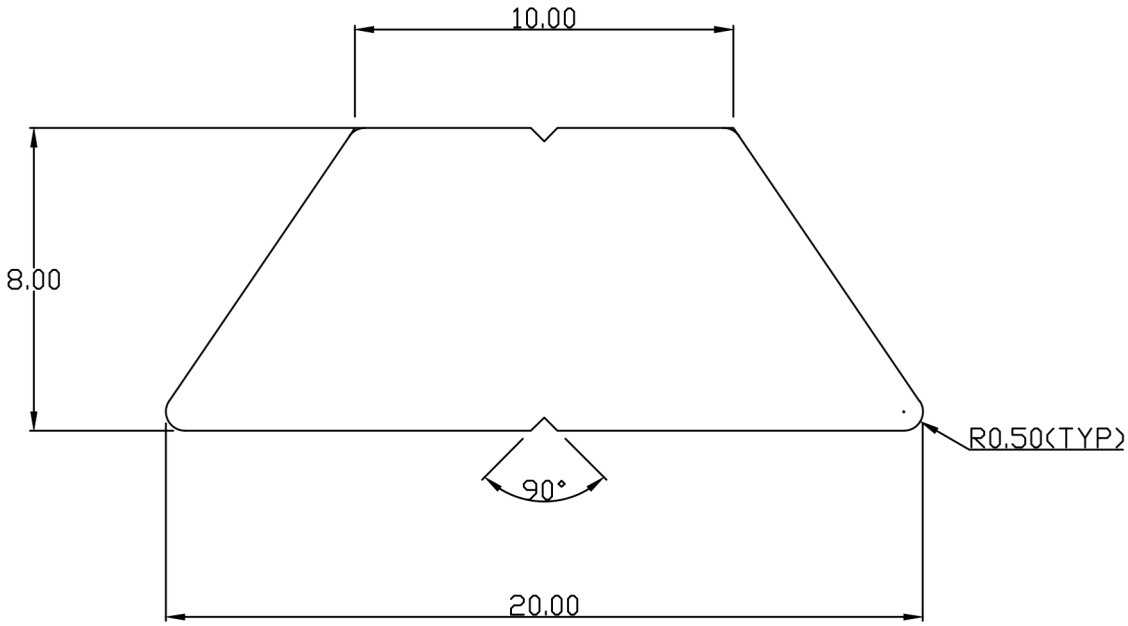

WITH DIN ISO 2768-1 class C = Coarse						
Dimension Longitudional	0.5 - 33 - 6 ±0.2 ±0.4	±0.3	6 - 30 ±0.5	30-120 ±0.8	120-400 ±1.2	
Degree Angle & Chamfer	0.5 - 33 - 6		6 - 30 ±2.0	30-120 ±0.8	±0°15°	
	±1.0 at 10	10-50	50-120120-400over 400			

NOTE:- ALL DIMENSIONS ARE IN mm.

AREA:- 122.8920 Sqmm^	ALLOY/TEMPER:- 6061 T6	
EX PERIMETER:- 49.1277 MM	FLATNESS:-±1.0mm^	DATE:-
WEIGHT:- 1.214 Kg/12'	TOLERANCES:	PARTY NAME:-
DESCRIPTION:-	ANGULARITY:-±1.0°	(M) No.:-
PARTY DRG. No.:-	straightness:-1.00mm/meter	APPROVED BY:-
SECTION NO:- NP-213	TWIST:-1.00mm/meter	SCALE:- 5:1

Global Solutions For Aluminium Extrusions

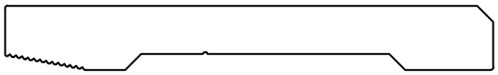

SCALE:- 1:1

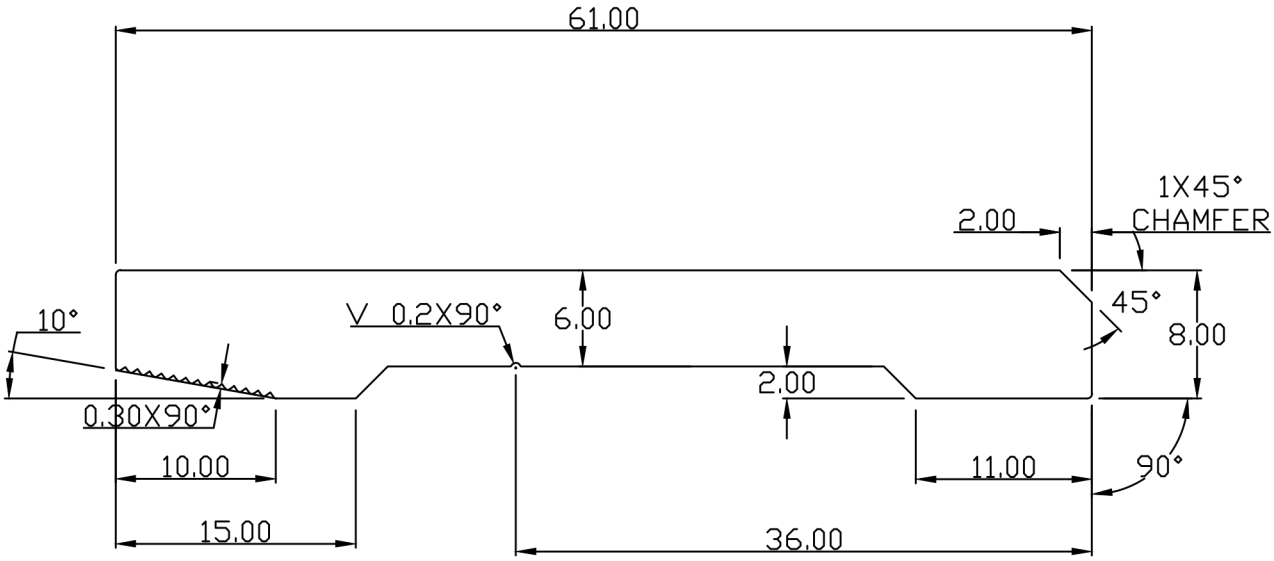

UNSPECIFIED TOLERANCES WILL BE IN ACCORDANCE WITH DIN ISO 2768-1 class C= Coarse

Dimension	0.5 - 33 - 6	6 - 30	30-120	120-400	400-1000
Longitudional	±0.2	±0.5	±0.8	±1.2	±2.0
Degrees & Minutes	±0.3	±1°	±0.8		
Radius & Chamfer	0.5 - 33 - 6	6 - 30	30-120		
	±0.4	±2.0	±0.8		
	at 10	10-505C-120120-400	over 400		

±0°30'
±0°15'

NOTE:- UNSPECIFIED RADIOUS ARE 0.3 mm.
NOTE:- ALL DIMENSIONS ARE IN mm.

AREA:- 409.8599 Sqmm^	ALLOY/TEMPER:- 6061 T6	
EX PERIMETER:- 139.7055 MM	FLATNESS:-±0.8mm^	
WEIGHT:- 1.1066 Kg/Mtr.	TOLERANCES:	
DESCRIPTION:- SIDE FRAME SECTION	ANGULARITY:-±2°	CHECKED BY:-
PARTY DRG NO:-	straightness:-1.70meter	APPROVED BY:-
SECTION NO:- NP-67	TWIST:-1.70mm/meter	SCALE:- 2:1

Global Solutions For Aluminium Extrusions

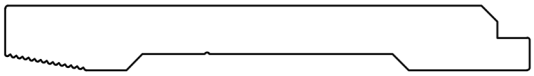

SCALE:- 1:1

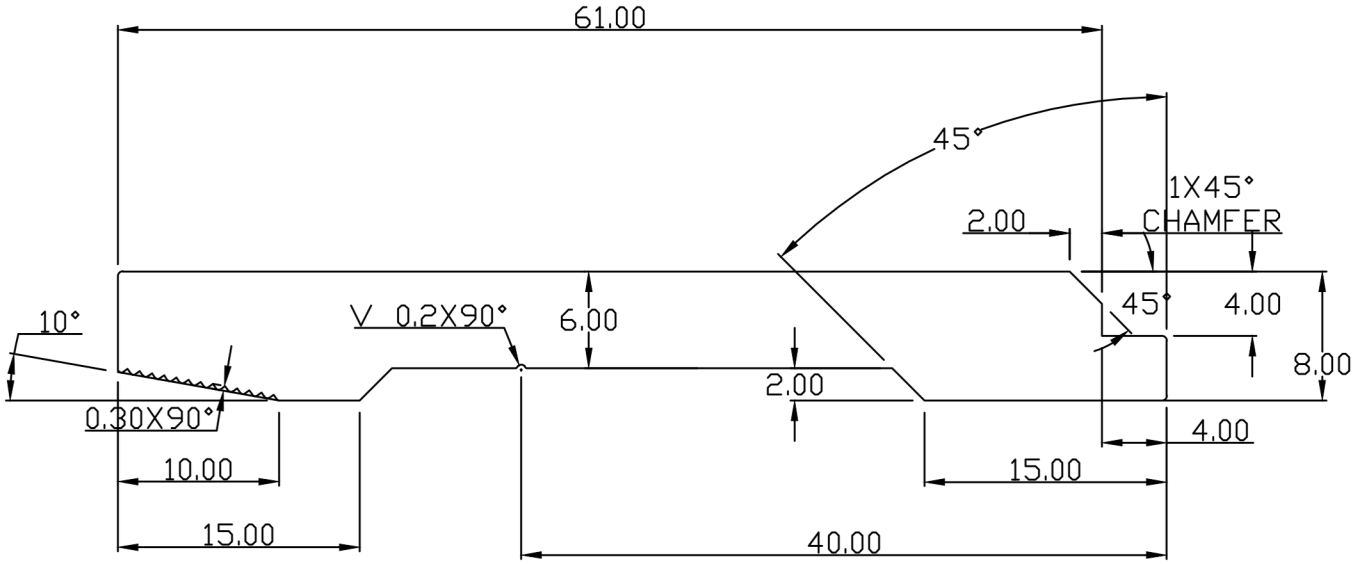

UNSPECIFIED TOLERANCES WILL BE IN ACCORDANCE WITH DIN ISO 2768-1 class C = Coarse

Dimension	0.5 - 33 - 6	6 - 30	30-120	120-400	400-1000
Longitudional	±0.2	±0.5	±0.8	±1.2	±2.0
Degree radius & chamfer	0.5 - 33 - 6 ±0.4	6 - 30 ±2.0	30-120 ±0.8		
Minutes	at 10	10-50	50-120	120-400	over 400
Degrees		±1°	±0°30'	±0°15'	

NOTE:- UNSPECIFIED RADIOUS ARE 0.3 mm.
NOTE:- ALL DIMENSIONS ARE IN mm.

AREA:- 425.8406 Sqmm^	ALLOY/TEMPER:- 6061 T6	
EX PERIMETER:- 147.5767 MM	FLATNESS:-±0.8mm^	
WEIGHT:- 1.150 Kg/Mtr.	TOLERANCES:	
DESCRIPTION:- MAIN FRAME SECTION	ANGULARITY:-±2°	CHECKED BY:-
PARTY DRG NO:-	straightness:-1.70meter	APPROVED BY:-
SECTION NO:- NP-68	TWIST:-1.70mm/meter	SCALE:- 2:1

Global Solutions For Aluminium Extrusions

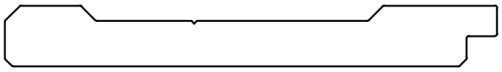

SCALE:- 1:1

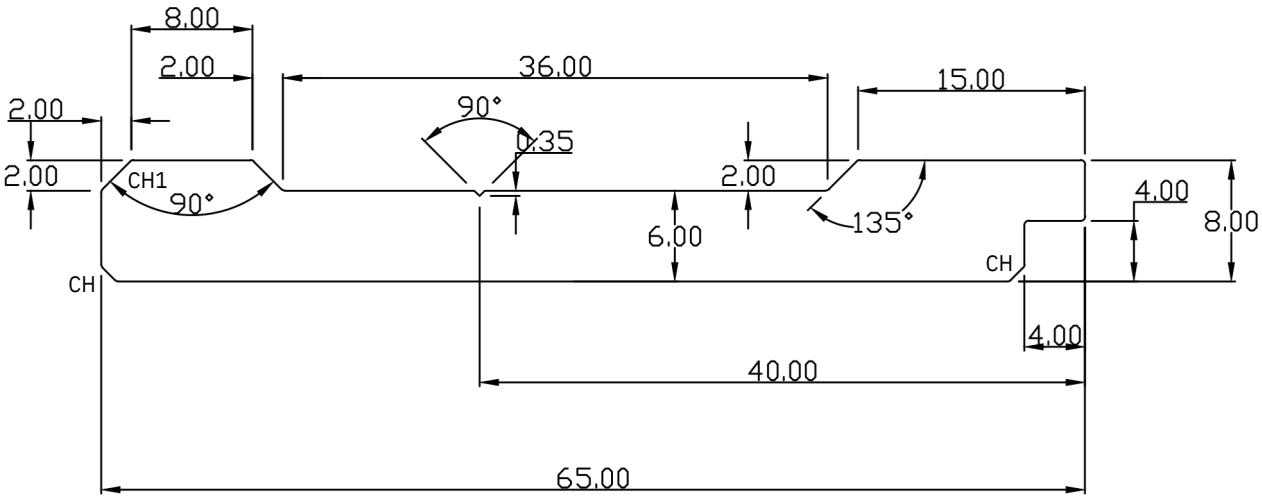

UNSPECIFIED TOLERANCES WILL BE IN ACCORDANCE WITH DIN ISO 2768-1 class C - Coarse

Dimension	0.5 - 33 - 6	6 - 30	30-120	120-400	400-1000
Longitudional	±0.4	±0.3	±0.5	±0.8	±1.2	±2.0
Degree & Radius & Chamfer	0.5 - 33 - 6 ±2.0	6 - 30 ±1°	30-120 ±0.8		
Mm/Degree	±1.0 at 10	10-50	50-120	120-400	over 400
		±1°	±1°	±30'	±30'

NOTE:- CH1-2.0X45°
NOTE:- CH-1.0X45°
NOTE:- UNSPECIFIED RADIUS:- 0.30 mm.
NOTE:- ALL DIMENSIONS ARE IN mm.

AREA:- 424.8466 Sqmm^	ALLOY/TEMPER:- 6061 T6	
EX PERIMETER:- 145.0883 MM	FLATNESS:-±0.7mm^	
WEIGHT:- 4.198 Kg/12'	TOLERANCES:	
DESCRIPTION:- AS PER DRAWING	ANGULARITY:-±1°	
PARTY DRG NO:- 1377	straightness:-1.50meter	APPROVED BY:-
SECTION NO:- NP-118	TWIST:-1.50mm/meter	SCALE:- 2:1

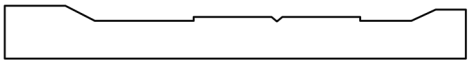

SCALE:- 1:1

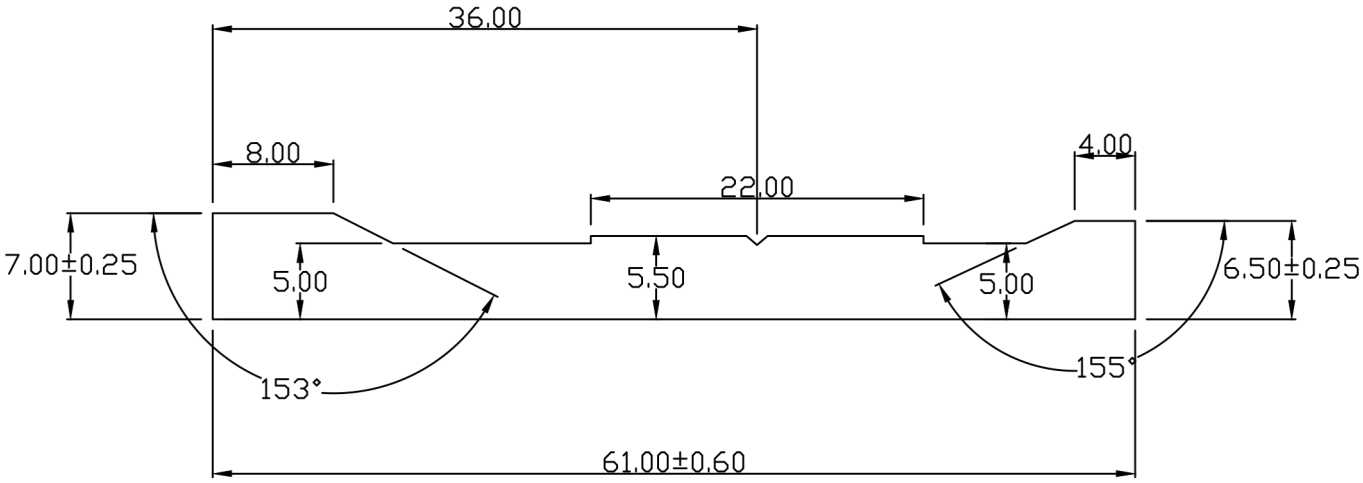

WITH DIN ISO 2768-1 class C = Coarse					
Dimension Longitudional	0.5 - 33 - 6 ±0.2 ±0.4	±0.3	6 - 30 ±0.5	30-120 ±0.8	120-400 ±1.2
Degree & Chamfer	0.5 - 33 - 6		6 - 30 ±2.0	30-120 ±0.8	±0°15°
	±1.0 at 10	10-50	50-120120-400over 400		

NOTE:- ALL DIMENSIONS ARE IN mm.

AREA:- 343.9178 Sqmm^	ALLOY/TEMPER:- 6061 T6	
EX PERIMETER:- 137.7566 MM	FLATNESS:-±0.9mm^	
WEIGHT:- 0.928 Kg/m	TOLERANCES:	
DESCRIPTION:-	ANGULARITY:-±1.0°	(M) No.:-
PARTY DRG. No.:-STIFNER SECTION	straightness:-±1.0mm/meter	APPROVED BY:-
SECTION NO:- NP-157	TWIST:-±1.0mm/meter	SCALE:- 2:1

Global Solutions For Aluminium Extrusions

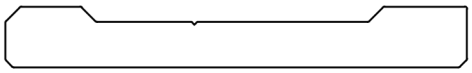

SCALE:- 1:1

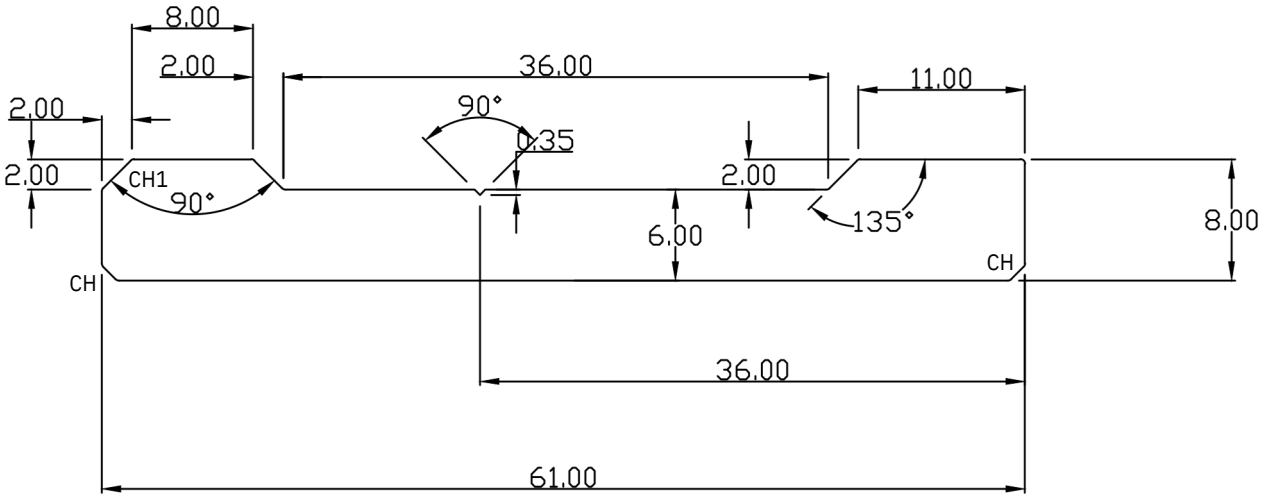

UNSPECIFIED TOLERANCES WILL BE IN ACCORDANCE WITH DIN ISO 2768-1 class C - Coarse

Dimension	0.5 - 33 - 6	6 - 30	30-120	120-400	400-1000
Longitudional	±0.2	±0.5	±0.8	±1.2	±2.0
Radius & Chamfer	±0.3	±1°	±1°		
Mounting angle	0.5 - 33 - 6	6 - 30	30-120		
	±0.4	±2.0	±0.8		
	at 10	10-50	50-120	120-400	over 400
		±1°	±1°	±30'	±30'

NOTE:- CH1-2.0X45°
NOTE:- CH-1.0X45°
NOTE:- UNSPECIFIED RADIUS:- 0.30 mm.
NOTE:- ALL DIMENSIONS ARE IN mm.

AREA:- 408.8466 Sqmm^	ALLOY/TEMPER:- 6061 T6	
EX PERIMETER:- 137.3458 MM	FLATNESS:-±0.7mm^	
WEIGHT:- 4.040 Kg/12'	TOLERANCES:	
DESCRIPTION:- AS PER DRAWING	ANGULARITY:-±1°	
PARTY DRG NO:- 1377	straightness:-1.50meter	APPROVED BY:-
SECTION NO:- NP-119	TWIST:-1.50mm/meter	SCALE:- 2:1

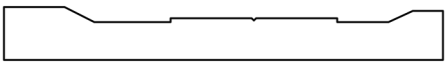

SCALE:- 1:1

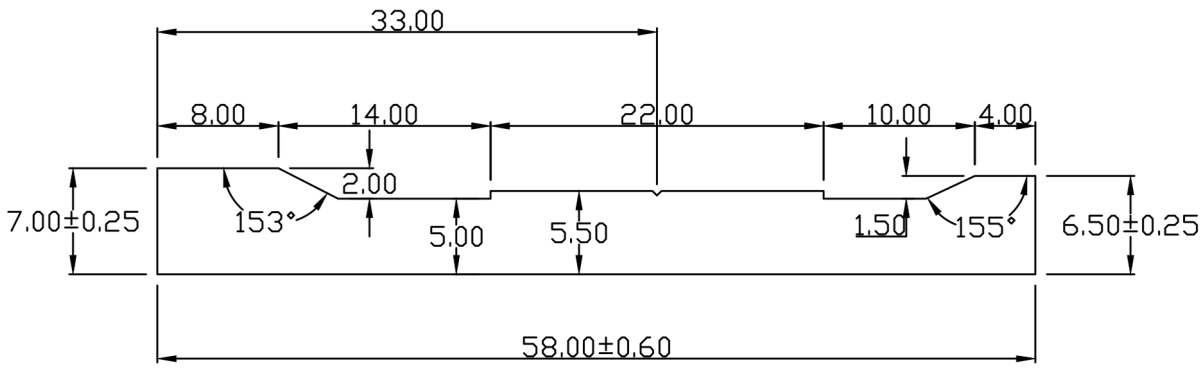

WITH DIN ISO 2768-1 class C = Coarse

Dimension	0.5 - 33 - 6	6 - 30	30-120	120-400
Longitudional	±0.2 ±0.4	±0.3	±0.5	±0.8	±1.2
Degree	0.5 - 33 - 6		6 - 30	30-120	±0°15°
Chamfer	±1.0 at 10	10-50	50-120120-400over 400	

NOTE:- ALL DIMENSIONS ARE IN mm.

AREA:- 329.2478 Sqmm^	ALLOY/TEMPER:- 6061 T6	
EX PERIMETER:- 131.5612 MM	FLATNESS:-±0.9mm^	DATE:-
WEIGHT:- 0.8889 Kg/Mtr.	TOLERANCES:	PARTY NAME:-
DESCRIPTION:-	ANGULARITY:-±1.4°	(M) No.:-
PARTY DRG. No.:-58mm FLAT RAIL	straightness:-1.50mm/meter	APPROVED BY:-
SECTION NO:- NP-209	TWIST:-2.50mm/meter	SCALE:- 2:1

Global Solutions For Aluminium Extrusions

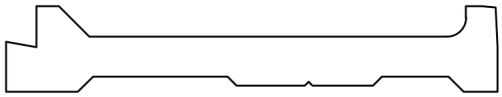

SCALE:- 1:1

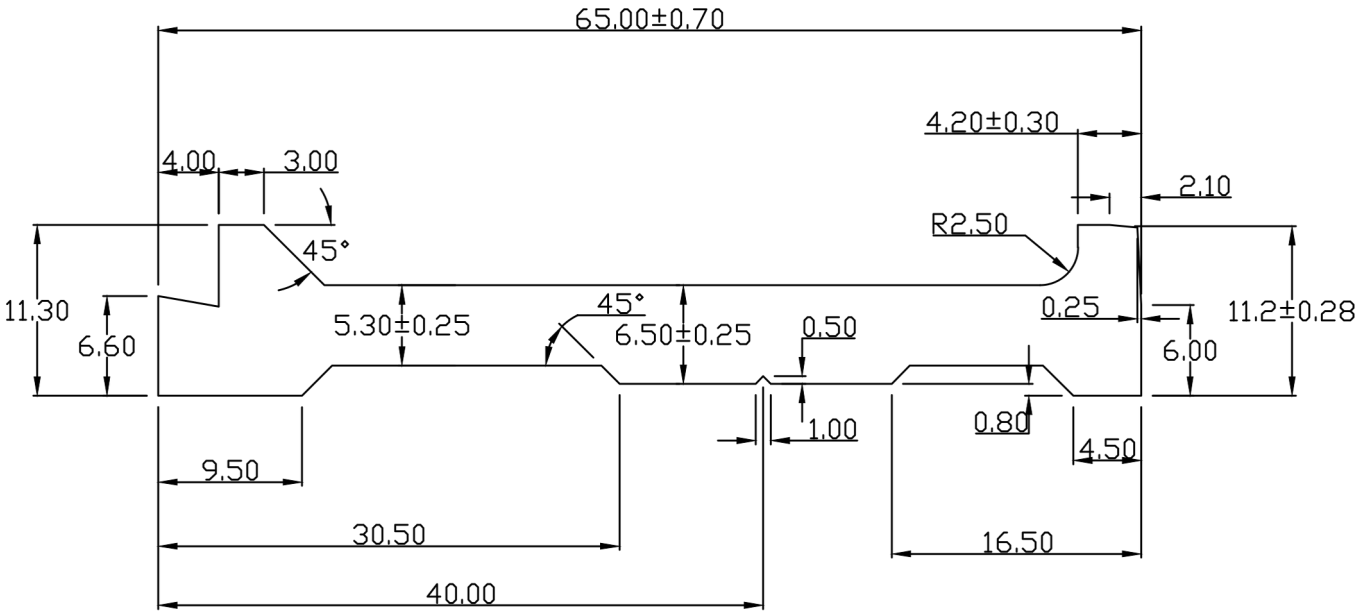

WITH DIN ISO 2768-1 class C = Coarse						
Dimension Longitudional	0.5 - 33 - 6 ±0.2 ±0.4	±0.3	6 - 30 ±0.5	30-120 ±0.8	120-400 ±1.2	
Degree & Angle	0.5 - 33 - 6		6 - 30 ±2.0	30-120 ±0.8	±0°15°	
Chamfer	±1.0 at 10	10-50	50-120120-400over 400			

NOTE:- ALL DIMENSIONS ARE IN mm.

AREA:- 432.3702 Sqmm^	ALLOY/TEMPER:- 6061 T6	
EX PERIMETER:- 160.6033 MM	FLATNESS:-±0.9mm^	DATE:-
WEIGHT:- 1.1674 Kg/Mtr.	TOLERANCES:	PARTY NAME:-
DESCRIPTION:-	ANGULARITY:-±1.4°	(M) No.:-
PARTY DRG. No.:- SIDE RAIL	straightness:-1.50mm/meter	APPROVED BY:-
SECTION NO:- NP-210	TWIST:-2.50mm/meter	SCALE:- 2:1

Global Solutions For Aluminium Extrusions

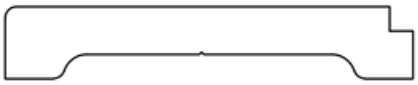

SCALE:- 1:1

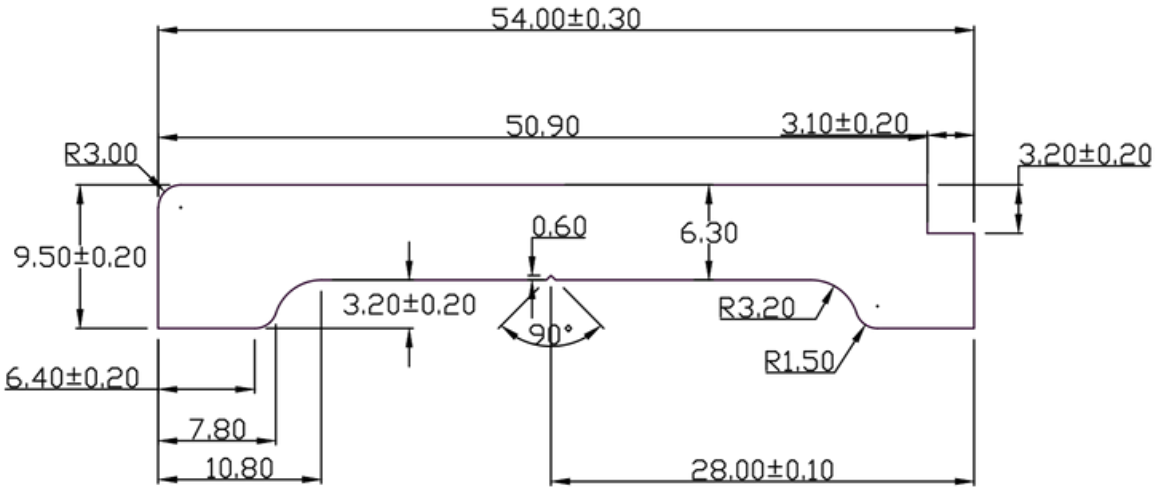

WITH DIN ISO 2768-1 class C = Coarse

Dimension Longitudional	0.5 - 33 - 6 ±0.2 ±0.4	±0.3	6 - 30 ±0.5	30-120 ±0.8	120-400 ±1.2
Degree & Chamfer	0.5 - 33 - 6		6 - 30 ±2.0	30-120 ±0.8	±0°15°
Radius	±1.0 at 10	10-50	50-120120-400over 400		

NOTE:- ALL DIMENSIONS ARE IN mm.

AREA:- 382.3508 Sqmm^	ALLOY/TEMPER:- 6061 T6	
EX PERIMETER:- 129.4326 MM	FLATNESS:-±1.0mm^	DATE:-
WEIGHT:- 3.7783 Kg/12'	TOLERANCES:	PARTY NAME:-
DESCRIPTION:-	ANGULARITY:-±1.0°	(M) No.:-
PARTY DRG NO:- NEW SIDE RAIL	straightness:-1.00mm/meter	APPROVED BY:-
SECTION NO:- NP-313	TWIST:-1.00mm/meter	SCALE:- 2:1

SCALE:- 1:1

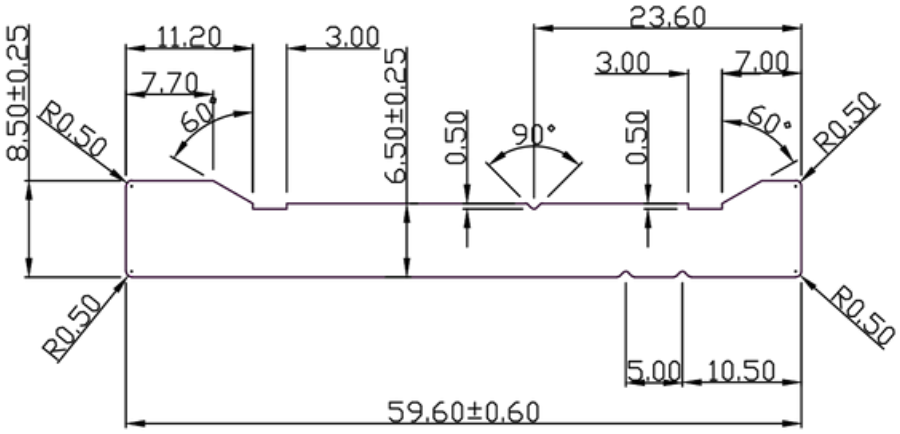

WITH DIN ISO 2768-1 class C = Coarse

Dimension Longitudional	0.5 - 33 - 6 ±0.2 ±0.4	±0.3	6 - 30 ±0.5	30-120 ±0.8	120-400 ±1.2
Degree & Chamfer	0.5 - 33 - 6		6 - 30 ±2.0	30-120 ±0.8	±0°15°
Radius	±1.0 at 10	10-50	50-120120-400over 400		

NOTE:- ALL DIMENSIONS ARE IN mm.

AREA:- 412.4626 Sqmm^	ALLOY/TEMPER:- 6061 T6	
EX PERIMETER:- 139.4916 MM	FLATNESS:-±0.45mm^	
WEIGHT:- 1.1136 Kg/Mtr.	TOLERANCES:	
DESCRIPTION:-	ANGULARITY:-±1.0°	(M) No.:-
PARTY DRG. No.:- STIFFENER	straightness:-1.00mm/meter	APPROVED BY:-
SECTION NO:- NP-407	TWIST:-1.00mm/meter	SCALE:- 1.5:1

Global Solutions For Aluminium Extrusions

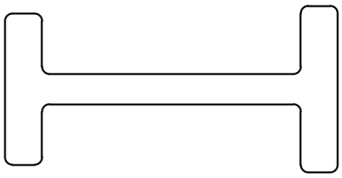

SCALE:- 1:1

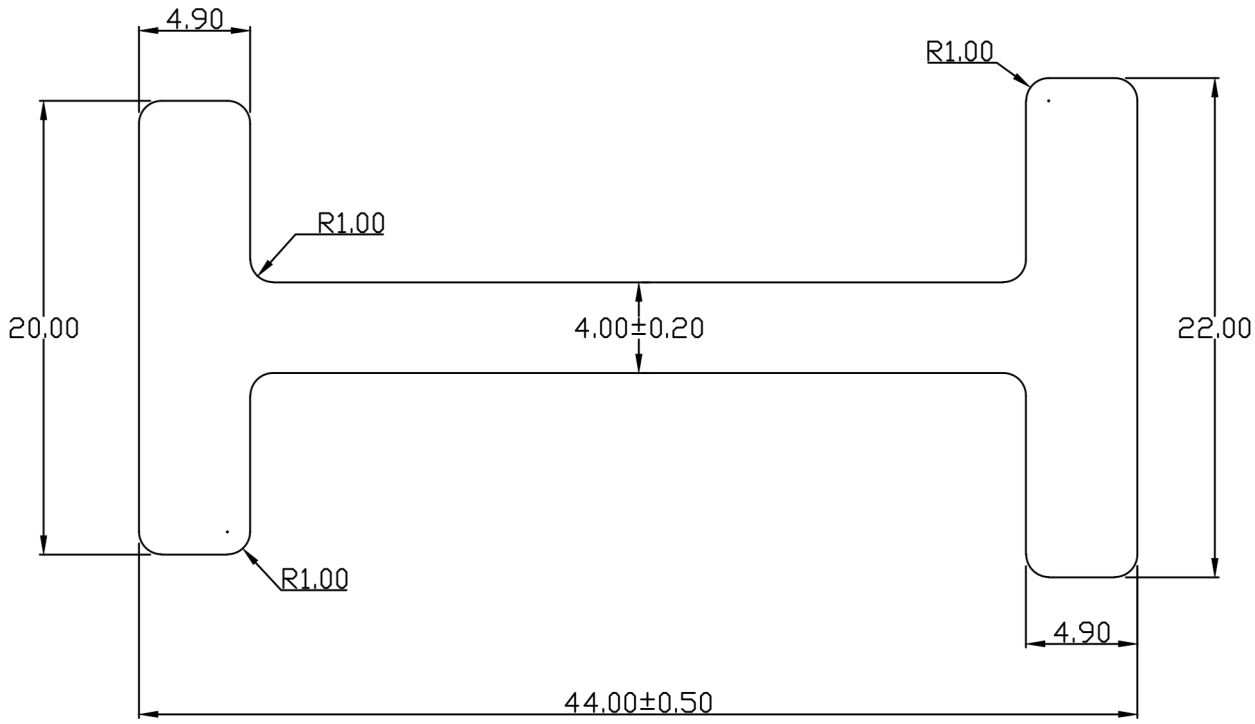

WITH DIN ISO 2768-1 class C = Coarse

Dimension	0.5 - 33 - 6	6 - 30	30-120	120-400
Longitudional	±0.2	±0.3	±0.5	±0.8	±1.2
Degree	0.5 - 33 - 6	6 - 30	30-120	±0°15°
Radius & Chamfer	±0.4	±1.0	±2.0	±0.8	
	at 10	10-50	50-120120-400over 400	

NOTE:- ALL DIMENSIONS ARE IN mm.

AREA:- 341.7416 Sqmm^	ALLOY/TEMPER:- 6063 T6	
EX PERIMETER:- 158.8496 MM	FLATNESS:-±0.9mm^	
WEIGHT:- 0.9227 Kg/m	TOLERANCES:	PARTY NAME:-
DESCRIPTION:-	ANGULARITY:-±1.4°	
PARTY DRG. No.:-RPTL DN 004	straightness:-1.50mm/meter	APPROVED BY:-
SECTION NO:- NP-152	TWIST:-2.50mm/meter	SCALE:- 3:1

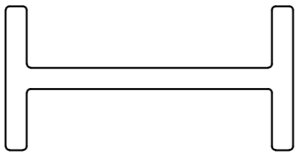

SCALE:- 1:1

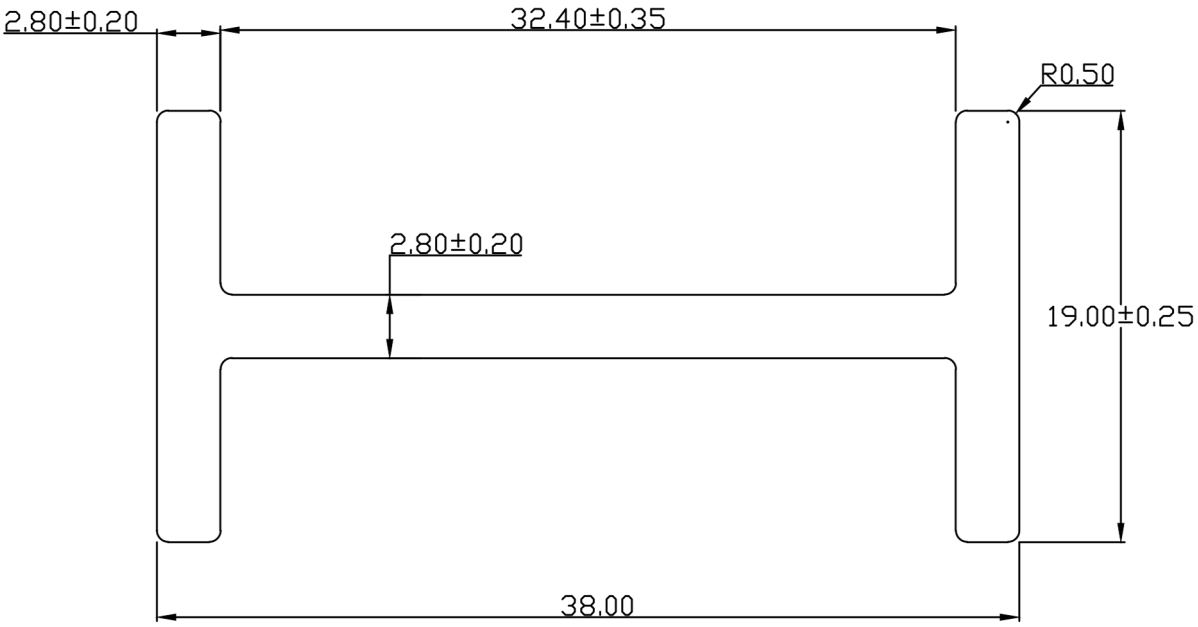

WITH DIN ISO 2768-1 class C = Coarse

Dimension	0.5 - 33 - 6	6 - 30	30-120	120-400
Longitudional	±0.2 ±0.4	±0.3	±0.5	±0.8	±1.2
Degree	0.5 - 33 - 6		6 - 30	30-120	±0°15°
Radius & Chamfer	±1.0 at 10	10-50	50-120120-400over 400	

NOTE:- ALL DIMENSIONS ARE IN mm.

AREA:- 196.9054 Sqmm^	ALLOY/TEMPER:- 6061 T6	
EX PERIMETER:- 143.8248 MM	FLATNESS:-±0.9mm^	
WEIGHT:- 0.532 Kg/m	TOLERANCES:	
DESCRIPTION:-	ANGULARITY:-±1.0°	
PARTY DRG. No.:-STIFNER SECTION	straightness:-±1.0mm/meter	APPROVED BY:-
SECTION NO:- NP-156	TWIST:-±1.0mm/meter	SCALE:- 3:1

Global Solutions For Aluminium Extrusions

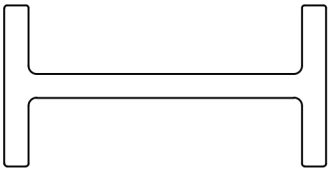

SCALE:- 1:1

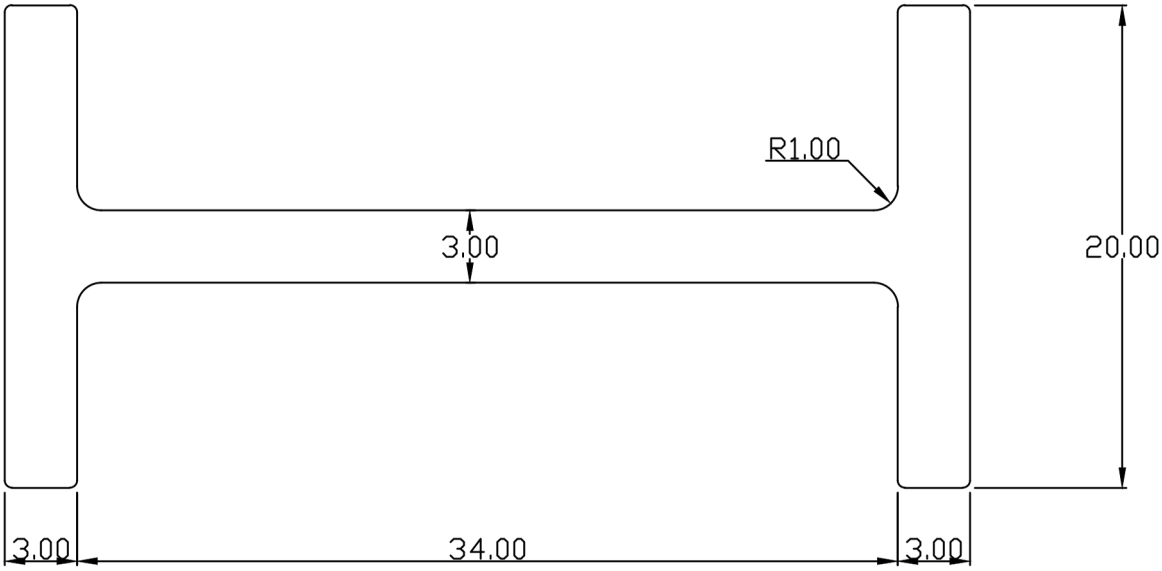

UNSPECIFIED TOLERANCES WILL BE IN ACCORDANCE WITH DIN ISO 2768-1 class C = Coarse

Dimension	0.5 - 33 - 6	6 - 30	30-120	120-400	400-1000
Longitudional	±0.2 ±0.4	±0.5	±0.8	±1.2	±2.0
Degree	±1°	±1°	±1°		
Radius & Chamfer	±0.3				
Minutes	0.5 - 33 - 6	6 - 30	30-120		
		±2.0	±0.8		
	10-50	50-120	120-400	over 400	
	±1.0 at 10	±30°	±15°		

NOTE:- UNSPECIFIED RADIOUS ARE 0.3 mm.
NOTE:- ALL DIMENSIONS ARE IN mm.

AREA:- 222.7039 Sqmm^	ALLOY/TEMPER:- 6061 T6	
EX PERIMETER:- 151.2531 MM	FLATNESS:-±0.8mm^	
WEIGHT:- 0.6013 Kg/Mtr.	TOLERANCES:	
DESCRIPTION:- I STIFFENER	ANGULARITY:-±2°	CHECKED BY:-
PARTY DRG NO:-	straightness:-1.70meter	APPROVED BY:-
SECTION NO:- NP-66	TWIST:-1.70mm/meter	SCALE:- 3:1

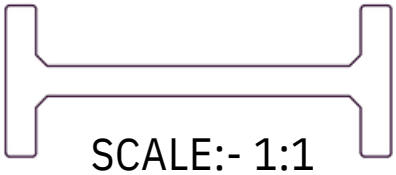

SCALE:- 1:1

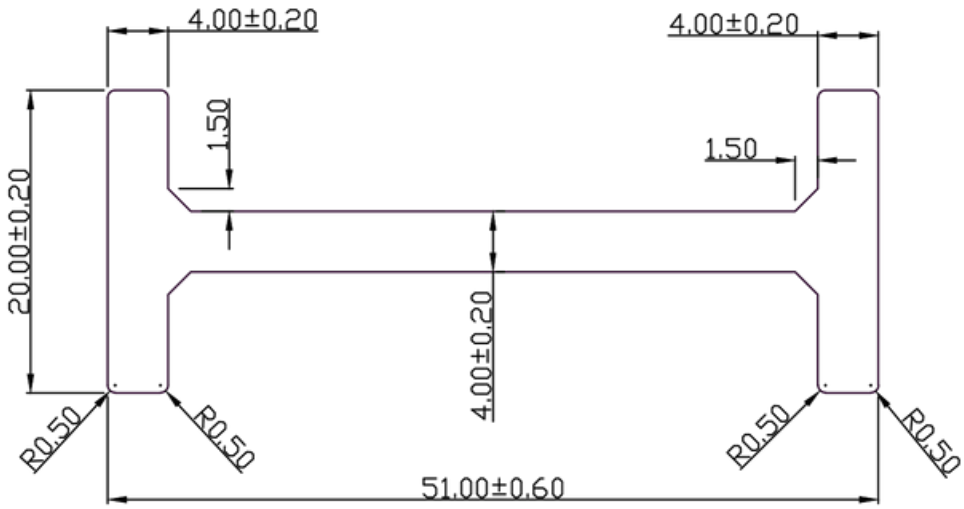

WITH DIN ISO 2768-1 class C = Coarse

Dimension	0.5 - 33 - 6	±0.3	6 - 30	30-120	120-400
Longitudional	±0.2 ±0.4		±0.5	±0.8	±1.2
Degree	0.5 - 33 - 6		6 - 30	30-120	±0°15°
Radius & Chamfer	±1.0 at 10	10-50	50-120120-400	over 400	

NOTE:- ALL DIMENSIONS ARE IN mm.

AREA:- 336.0708 Sqmm^	ALLOY/TEMPER:- 6061 T6	
EX PERIMETER:- 168.7685 MM	FLATNESS:-±0.45mm^	
WEIGHT:- 0.9073 Kg/Mtr.	TOLERANCES:	
DESCRIPTION:-	ANGULARITY:-±1.0°	(M) No.:-
PARTY DRG. No.:- STIFFENER	straightness:-1.00mm/meter	APPROVED BY:-
SECTION NO:- NP-405	TWIST:-1.00mm/meter	SCALE:- 2:1

Global Solutions For Aluminium Extrusions

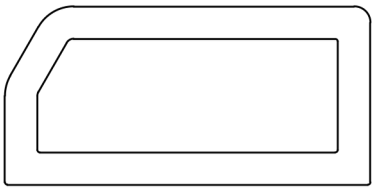

SCALE:- 1:1

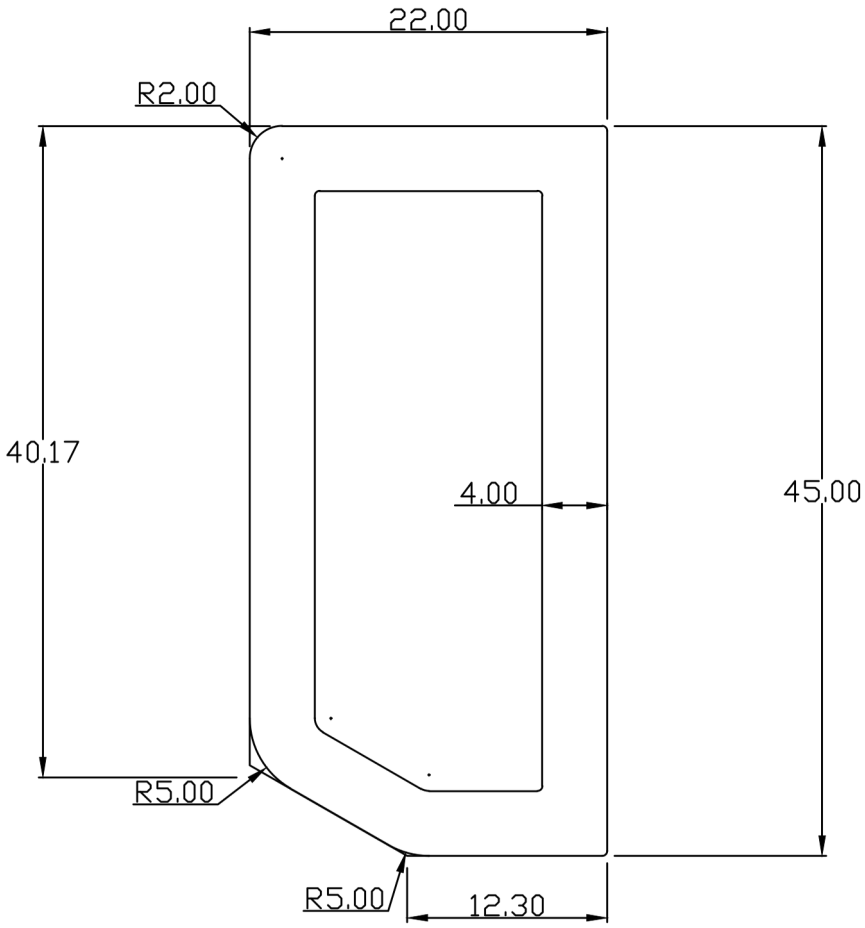

UNSPECIFIED TOLERANCES WILL BE IN ACCORDANCE WITH DIN ISO 2768-1 class C= Coarse

Dimension	0.5 - 33 - 6	6 - 30	30-120	120-400	400-1000
Longitudional	±0.2 ±0.4	±0.3	±0.5 ±1°	±0.8	±1.2	±2.0
Radius & Chamfer	0.5 - 33 - 6		6 - 30 ±2.0 ±1°	30-120 ±0.8	
Minutes & Seconds	±1.0 at 10	10-50	50-120 ±30°	120-400 ±15°	over 400

NOTE:- UNSPECIFIED RADIOUS ARE 0.3 mm.
NOTE:- ALL DIMENSIONS ARE IN mm.

AREA:- 455.7997 Sqmm^	ALLOY/TEMPER:- 6061 T6	
EX PERIMETER:- 128.1854 MM	FLATNESS:-±0.8mm^	
WEIGHT:- 1.1230 Kg/Mtr.	TOLERANCES:	
DESCRIPTION:- SOLDIER TIE	ANGULARITY:-±2°	CHECKED BY:-
PARTY DRG NO:-	straightness:-1.70meter	APPROVED BY:-
SECTION NO:- NP-69	TWIST:-1.70mm/meter	SCALE:- 2:1

Global Solutions For Aluminium Extrusions

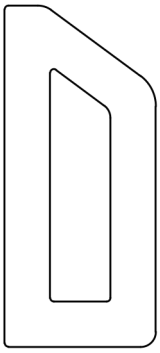

SCALE:- 1:1

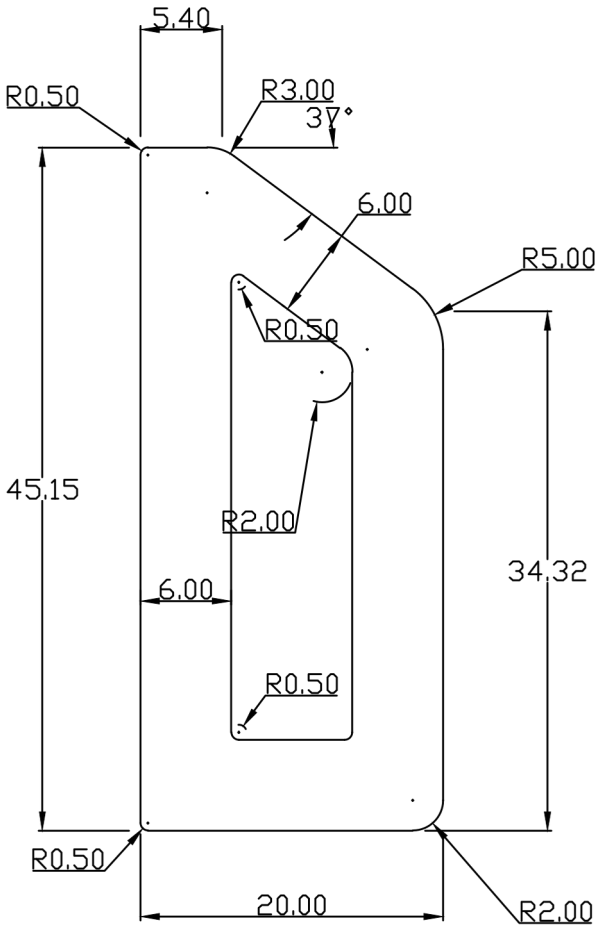

WITH DIN ISO 2768-1 class C = Coarse							
Dimension Longitudional	0.5 - 33 - 6 ±0.2	±0.3	6 - 30 ±0.5	30-120 ±0.8	120-400 ±1.2		
Degree Radius & Chamfer	0.5 - 33 - 6 ±0.4		6 - 30 ±2.0	30-120 ±0.8	±0°15°		
	±1.0 at 10	10-50	50-120	120-400	over 400		

NOTE:- ALL DIMENSIONS ARE IN mm.

AREA:- 596.2975 Sqmm^	ALLOY/TEMPER:- 6061 T6	
EX PERIMETER:- 121.3237 MM	FLATNESS:-±0.9mm^	DATE:-
WEIGHT:- 1.610 Kg/Mtr.	TOLERANCES:	PARTY NAME:-
DESCRIPTION:-	ANGULARITY:-±1.4°	(M) No.:-
PARTY DRG. No.:-	straightness:-1.50mm/meter	APPROVED BY:-
SECTION NO:- NP-195	TWIST:-2.50mm/meter	SCALE:- 2:1

Global Solutions For Aluminium Extrusions

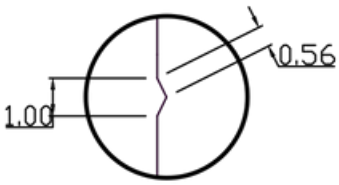

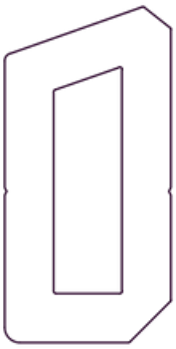

SCALE:- 1:1

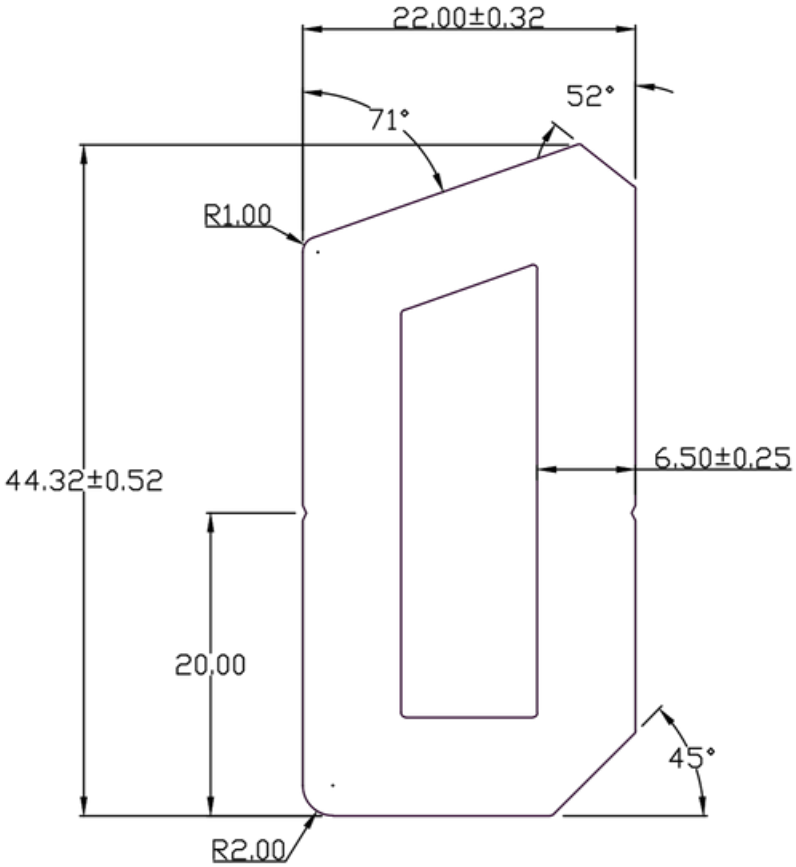

WITH DIN ISO 2768-1 class C = Coarse

Dimension	0.5 - 33 - 6	6 - 30	30-120	120-400
Longitudional	±0.2 ±0.4	±0.5	±0.8	±1.2

Degree	0.5 - 33 - 6	6 - 30	30-120	120-400
Angular & Chamfer	±1.0 at 10	10-50	50-120120-400over 400	±0°15°

NOTE:- ALL DIMENSIONS ARE IN mm.

AREA:- 640.1132 Sqmm^	ALLOY/TEMPER:- 6063 T6	
EX PERIMETER:- 121.4384 MM	FLATNESS:-±0.9mm^	
WEIGHT:- 1.7283 Kg/m	TOLERANCES:	PARTY NAME:-
DESCRIPTION:-	ANGULARITY:-±1.4°	(M) No.:-
PARTY DRG. No.:- BBX	straightness:-1.50mm/meter	APPROVED BY:-
SECTION NO:- NP-180	TWIST:-2.50mm/meter	SCALE:- 2:1

Global Solutions For Aluminium Extrusions

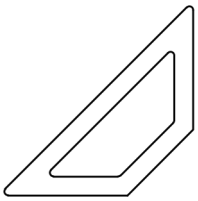

SCALE:- 1:1

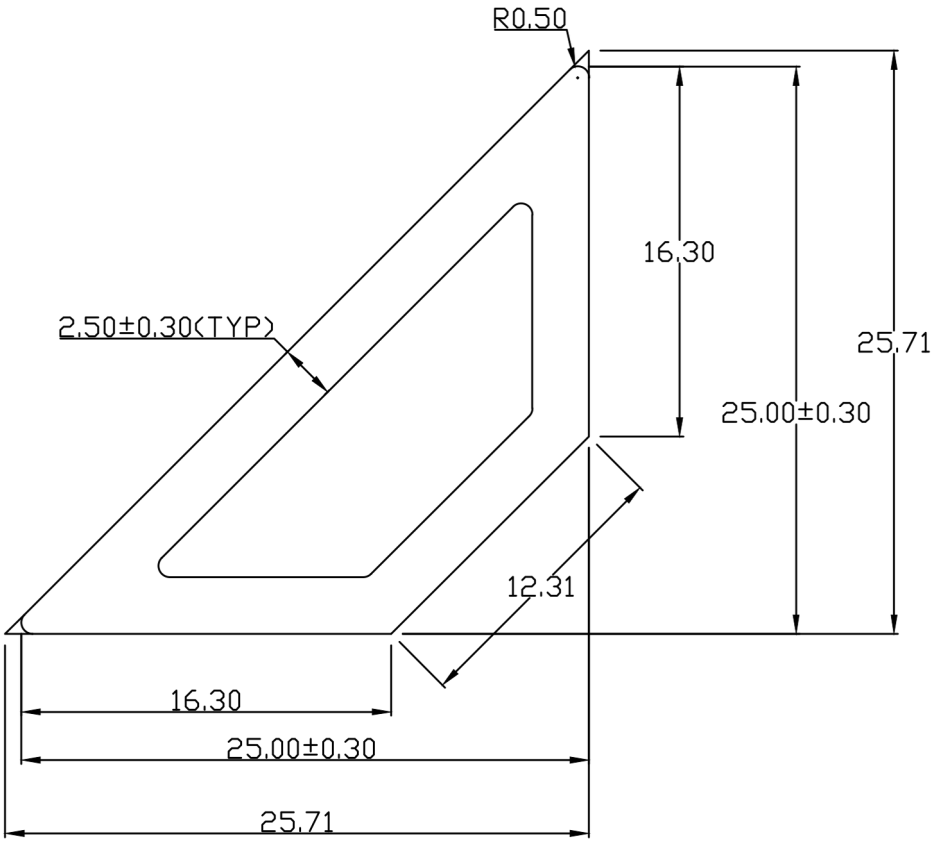

WITH DIN ISO 2768-1 class C = Coarse

Dimension	0.5 - 33 - 6	6 - 30	30-120	120-400
Longitudional	±0.2 ±0.4	±0.3	±0.5	±0.8	±1.2
Degree	0.5 - 33 - 6		6 - 30	30-120	±0°15°
Radius & Chamfer	±1.0 at 10	10-50	50-120120-400over 400	±0.8	

NOTE:- ALL DIMENSIONS ARE IN mm.

AREA:- 171.3589 Sqmm^	ALLOY/TEMPER:- 6061 T6	
EX PERIMETER:- 80.2092 MM	FLATNESS:-±0.9mm^	
WEIGHT:- 0.4626 Kg/m	TOLERANCES:	
DESCRIPTION:-	ANGULARITY:-±1.0°	(M) No.:-
PARTY DRG. No.:-	straightness:-±1.0mm/meter	APPROVED BY:-
SECTION NO:- NP-160	TWIST:-±1.0mm/meter	SCALE:- 1:1

Global Solutions For Aluminium Extrusions

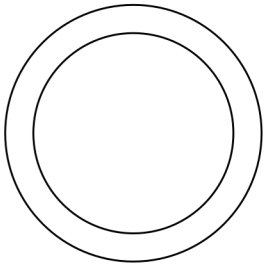

SCALE:- 1:1

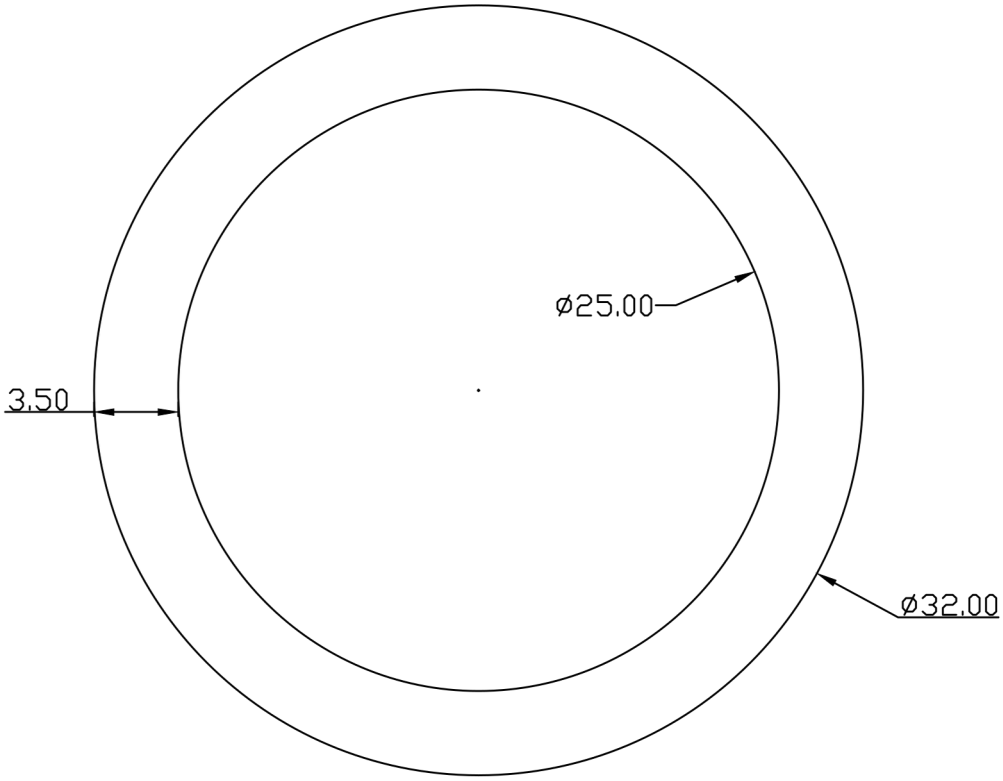

UNSPECIFIED TOLERANCES WILL BE IN ACCORDANCE WITH DIN ISO 2768-1 class C = Coarse

Dimension	0.5 - 33 - 6	6 - 30	30-120	120-400	400-1000
Longitudional	±0.2	±0.5	±0.8	±1.2	±2.0
Radius & Chamfer	±0.4	±1°	±1°		
Minutes	±0.3	±30°	±15°		

	0.5 - 33 - 6	6 - 30	30-120	120-400	over 400
Radius & Chamfer	±1.0	±2.0	±0.8		
Minutes	at 10	10-50	50-120	120-400	

NOTE:- UNSPECIFIED RADIOUS ARE 0.3 mm.
NOTE:- ALL DIMENSIONS ARE IN mm.

AREA:- 313.3738 Sqmm^	ALLOY/TEMPER:- 6061 T6	
EX PERIMETER:- 100.5310 MM	FLATNESS:-±0.8mm^	
WEIGHT:- 0.846 Kg/Mtr.	TOLERANCES:	
DESCRIPTION:- ROUND PIPE Ø 32	ANGULARITY:-±2°	CHECKED BY:-
PARTY DRG NO:-	straightness:-1.70meter	APPROVED BY:-
SECTION NO:- NP-45	TWIST:-1.70mm/meter	SCALE:- 3:1

Global Solutions For Aluminium Extrusions

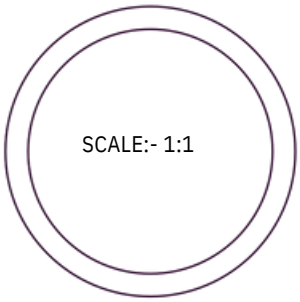

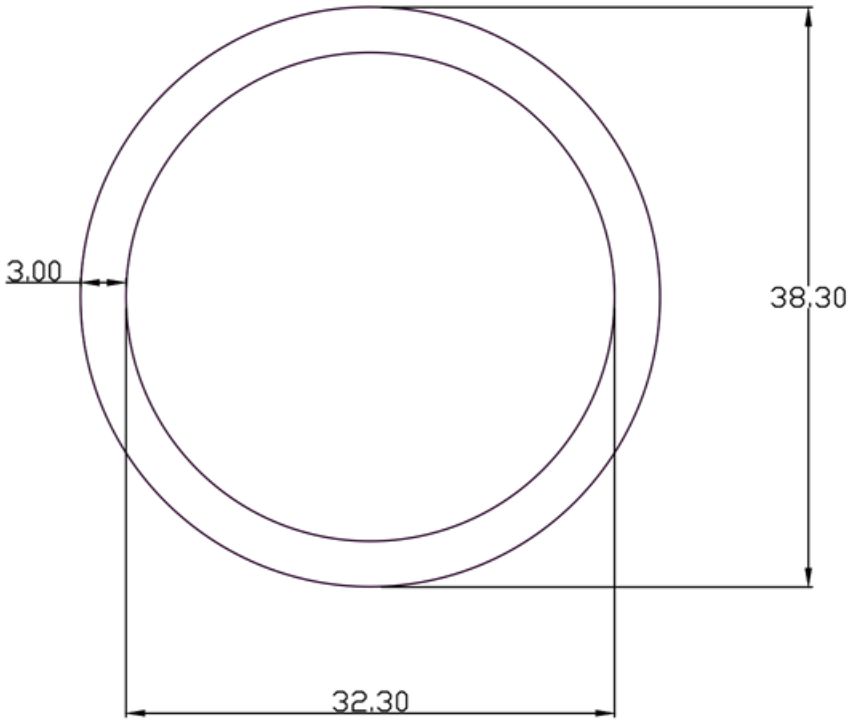

WITH DIN ISO 2768-1 class C = Coarse							
Dimension Longitudional	0.5 - 33 - 6 ±0.2 ±0.4	±0.3	6 - 30 ±0.5	30-120 ±0.8	120-400 ±1.2		
Degree & Radius & Chamfer	0.5 - 33 - 6		6 - 30 ±2.0	30-120 ±0.8	±0°15°		
	±1.0 at 10	10-50	50-120120-400over 400				

NOTE:- ALL DIMENSIONS ARE IN mm.

AREA:- 332.6947 Sqmm^	ALLOY/TEMPER:- 6063 T6	
CIRCUMFERENCE:- 120.3230 MM	FLATNESS:-±0.9mm^	
WEIGHT:- 0.8982 Kg/m	TOLERANCES:	PARTY NAME:-
DESCRIPTION:-	ANGULARITY:-±1.4°	(M) No.:-
PARTY DRG. No.:- PSX-R	straightness:-1.50mm/meter	APPROVED BY:-
SECTION NO:- NP-182	TWIST:-2.50mm/meter	SCALE:- 2:1

Global Solutions For Aluminium Extrusions

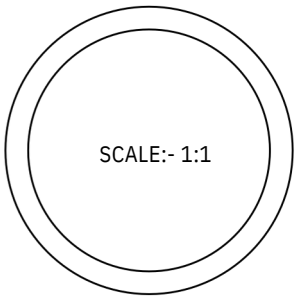

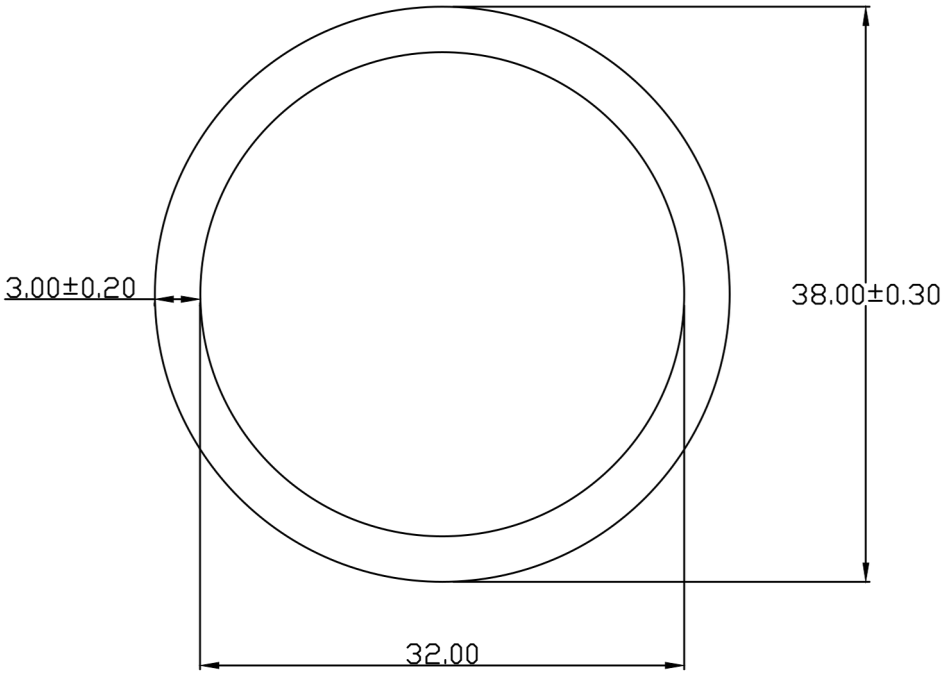

WITH DIN ISO 2768-1 class C = Coarse

Dimension Longitudional	0.5 - 33 - 6 ±0.2	±0.3	6 - 30 ±0.5	30-120 ±0.8	120-400 ±1.2
Degree & Radius & Chamfer	0.5 - 33 - 6 ±0.4	±1.0	6 - 30 ±2.0	30-120 ±0.8	±0°15°
	at 10	10-50	50-120120-400over 400		

NOTE:- ALL DIMENSIONS ARE IN mm.

AREA:- 329.8672 Sqmm^	ALLOY/TEMPER:- 6061 T6	
CIRCUMFERENCE:- 119.3805 MM	FLATNESS:-±0.9mm^	
WEIGHT:- 0.8672 Kg/Mtr.	TOLERANCES:	PARTY NAME:-
DESCRIPTION:-	ANGULARITY:-±1.4°	(M) No.:-
PARTY DRG. No.:- ROUND PIPE	straightness:-1.50mm/meter	APPROVED BY:-
SECTION NO:- NP-194	TWIST:-2.50mm/meter	SCALE:- 2:1

Global Solutions For Aluminium Extrusions

SCALE:- 1:1

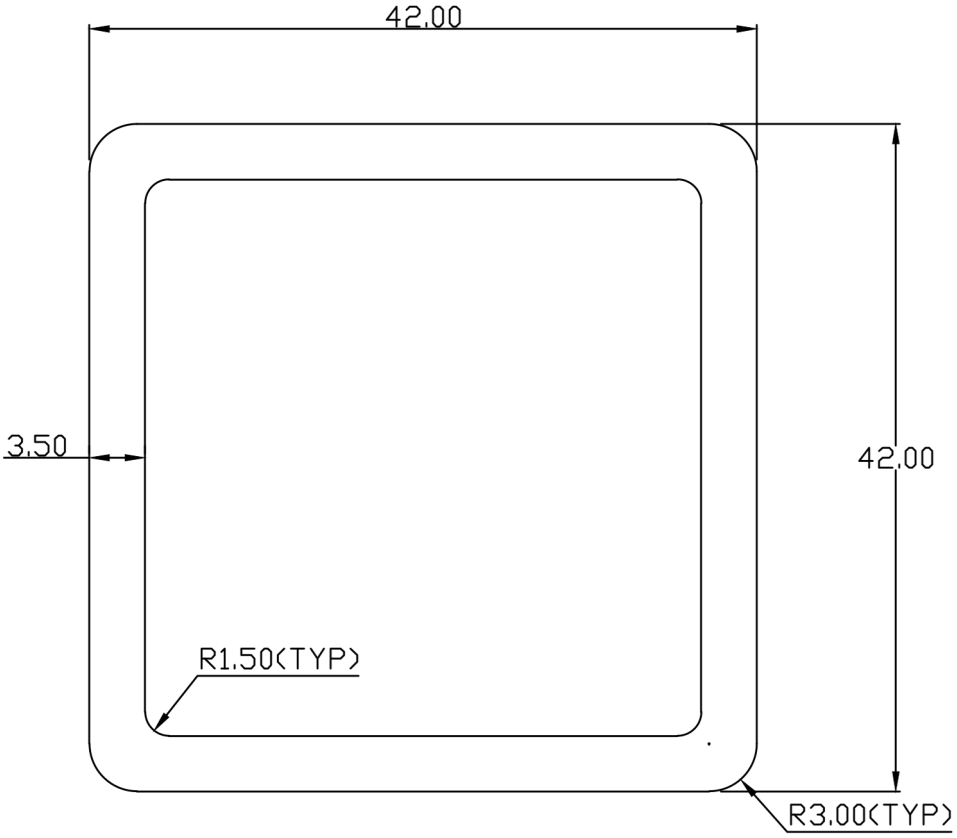

UNSPECIFIED TOLERANCES WILL BE IN ACCORDANCE WITH DIN ISO 2768-1 class C = Coarse

Dimension Longitudional	0.5 - 33 - 6 ±0.2	±0.3	6 - 30 ±1° ±0.5	30-120 ±0.8	120-400 ±1.2	400-1000 ±2.0
Radius & Chamfer	0.5 - 33 - 6 ±0.4		6 - 30 ±1° ±2.0	30-120 ±0.8		
Minutes	±1.0 at 10	10-50	50-120	120-400	over 400	

NOTE:- UNSPECIFIED RADIOUS ARE 0.3 mm.
NOTE:- ALL DIMENSIONS ARE IN mm.

AREA:- 533.2057 Sqmm^	ALLOY/TEMPER:- 6061 T6	
EX PERIMETER:- 162.8496 MM	FLATNESS:-±0.8mm^	
WEIGHT:- 1.439 Kg/Mtr.	TOLERANCES:	
DESCRIPTION:- PROP INNER	ANGULARITY:-±2°	CHECKED BY:-
PARTY DRG NO:-	straightness:-1.70meter	APPROVED BY:-
SECTION NO:- NP-46	TWIST:-1.70mm/meter	SCALE:- 2:1

Global Solutions For Aluminium Extrusions

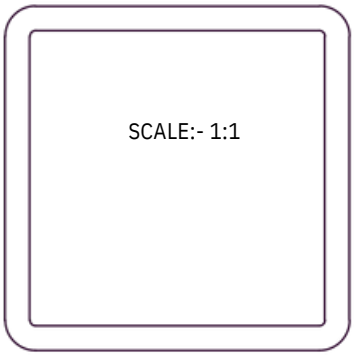

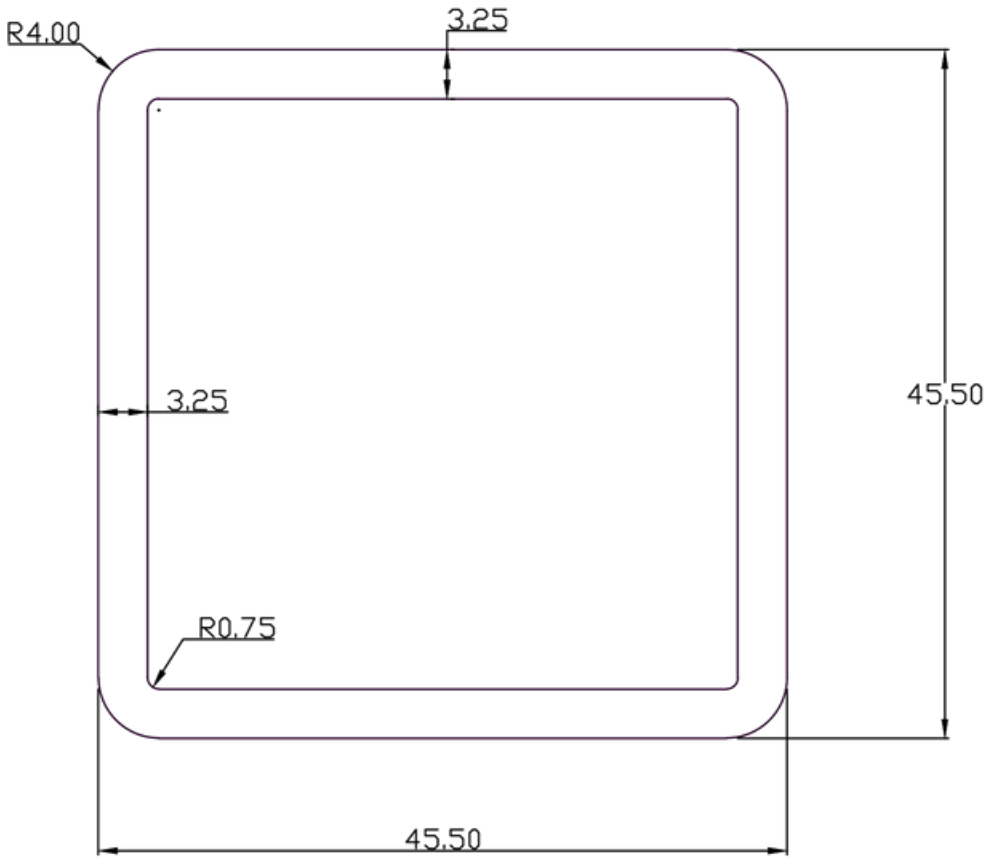

WITH DIN ISO 2768-1 class C = Coarse						
Dimension Longitudional	0.5 - 33 - 6 ±0.2 ±0.4	±0.3	6 - 30 ±0.5	30-120 ±0.8	120-400 ±1.2	
Degree Chamfer	0.5 - 33 - 6		6 - 30 ±2.0	30-120 ±0.8	±0°15°	
	±1.0 at 10	10-50	50-120120-400over 400			

NOTE:- ALL DIMENSIONS ARE IN mm.

AREA:- 535.9984 Sqmm^	ALLOY/TEMPER:- 6063 T6	
EX PERIMETER:- 154.7124 MM	FLATNESS:-±0.9mm^	
WEIGHT:- 1.4472 Kg/m	TOLERANCES:	PARTY NAME:-
DESCRIPTION:-	ANGULARITY:-±1.4°	(M) No.:-
PARTY DRG. No.:- PSX	straightness:-1.50mm/meter	APPROVED BY:-
SECTION NO:- NP-183	TWIST:-2.50mm/meter	SCALE:- 2:1

Global Solutions For Aluminium Extrusions

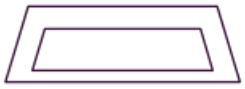

SCALE:- 1:1

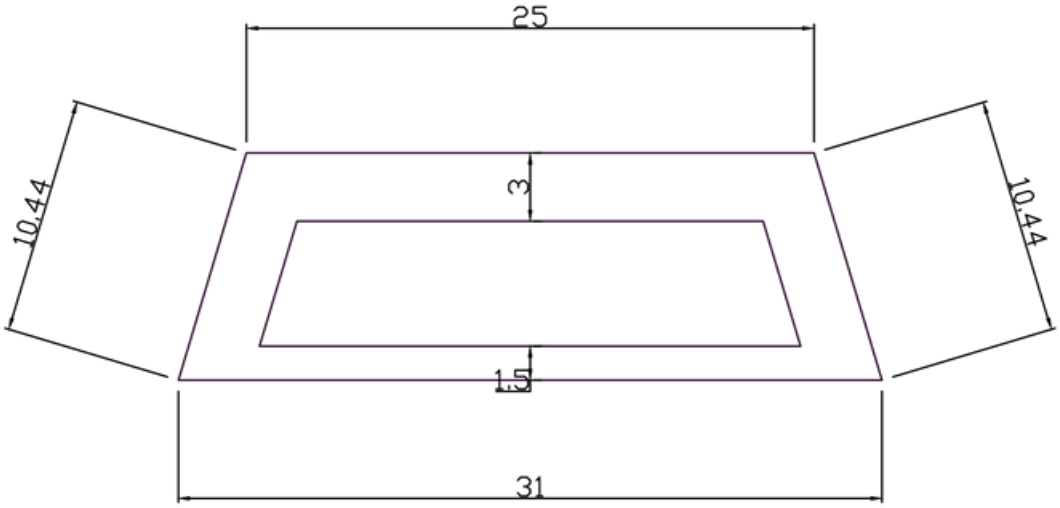

WITH DIN ISO 2768-1 class C = Coarse

Dimension Longitudional	0.5 - 33 - 6 ±0.2 ±0.4	±0.3	6 - 30 ±0.5	30-120 ±0.8	120-400 ±1.2
chamfer & radius	0.5 - 33 - 6		6 - 30 ±2.0	30-120 ±0.8	±0°15°
Degrees & Minutes	±1.0 at 10	10-50	50-120120-400over 400		

NOTE:- ALL DIMENSIONS ARE IN mm.

AREA:- 157.978 Sqmm^	ALLOY/TEMPER:- 6063 T6	
EX PERIMETER:- 76.8806 MM	FLATNESS:-±0.9mm^	
WEIGHT:- 0.4265 Kg/m	TOLERANCES:	PARTY NAME:-
DESCRIPTION:-	ANGULARITY:-±1.4°	(M) No.:-
PARTY DRG. No.:- GROOVE R	straightness:-1.50mm/meter	APPROVED BY:-
SECTION NO:- NP-185	TWIST:-2.50mm/meter	SCALE:- 3:1

Global Solutions For Aluminium Extrusions

SCALE:- 1:1

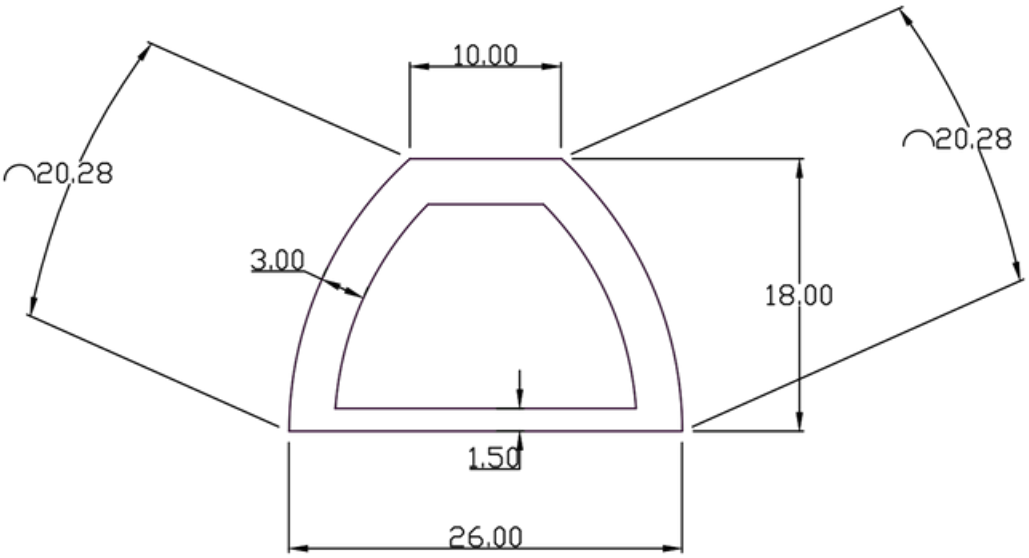

WITH DIN ISO 2768-1 class C = Coarse

Dimension Longitudional	0.5 - 33 - 6 ±0.2 ±0.4	±0.3	6 - 30 ±0.5	30-120 ±0.8	120-400 ±1.2
chamfer & radius	0.5 - 33 - 6		6 - 30 ±2.0	30-120 ±0.8	±0°15°
Degrees & Minutes	±1.0 at 10	10-50	50-120120-400over 400		

NOTE:- ALL DIMENSIONS ARE IN mm.

AREA:- 167.1761 Sqmm^	ALLOY/TEMPER:- 6063 T6	
EX PERIMETER:- 76.5678 MM	FLATNESS:-±0.9mm^	
WEIGHT:- 0.4513 Kg/m	TOLERANCES:	PARTY NAME:-
DESCRIPTION:-	ANGULARITY:-±1.4°	(M) No.:-
PARTY DRG. No.:- DRIP MOULD R	straightness:-1.50mm/meter	APPROVED BY:-
SECTION NO:- NP-184	TWIST:-2.50mm/meter	SCALE:- 2:1

Global Solutions For Aluminium Extrusions

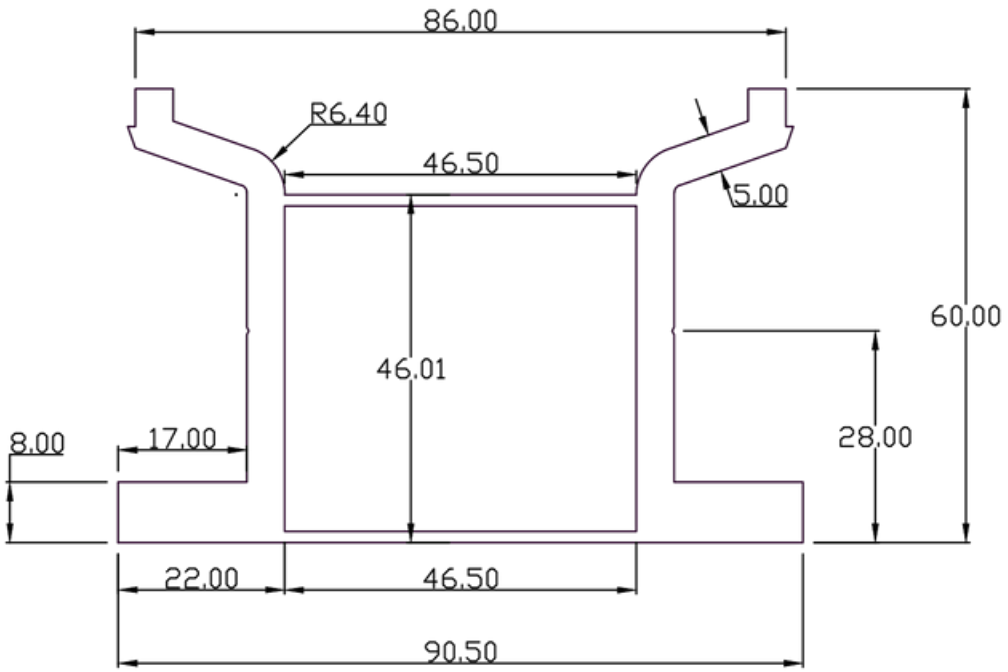

WITH DIN ISO 2768-1 class C = Coarse

Dimension Longitudional	0.5 - 33 - 6 ±0.2 ±0.4	±0.3	6 - 30 ±0.5	30-120 ±0.8	120-400 ±1.2
chamfer & radius	0.5 - 33 - 6		6 - 30 ±2.0	30-120 ±0.8	±0°15°
Degrees & Minutes	±1.0 at 10	10-50	50-120120-400over 400		

NOTE:- ALL DIMENSIONS ARE IN mm.

AREA:- 1111.1922 Sqmm^	ALLOY/TEMPER:- 6063 T6	
EX PERIMETER:- 370.6340 MM	FLATNESS:-±0.9mm^	
WEIGHT:- 3.0002 Kg/m	TOLERANCES:	PARTY NAME:-
DESCRIPTION:-	ANGULARITY:-±1.4°	(M) No.:-
PARTY DRG. No.:- DBX-B	straightness:-1.50mm/meter	APPROVED BY:-
SECTION NO:- NP-186	TWIST:-2.50mm/meter	SCALE:- 1:1

Global Solutions For Aluminium Extrusions

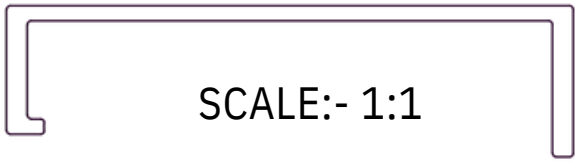

SCALE:- 1:1

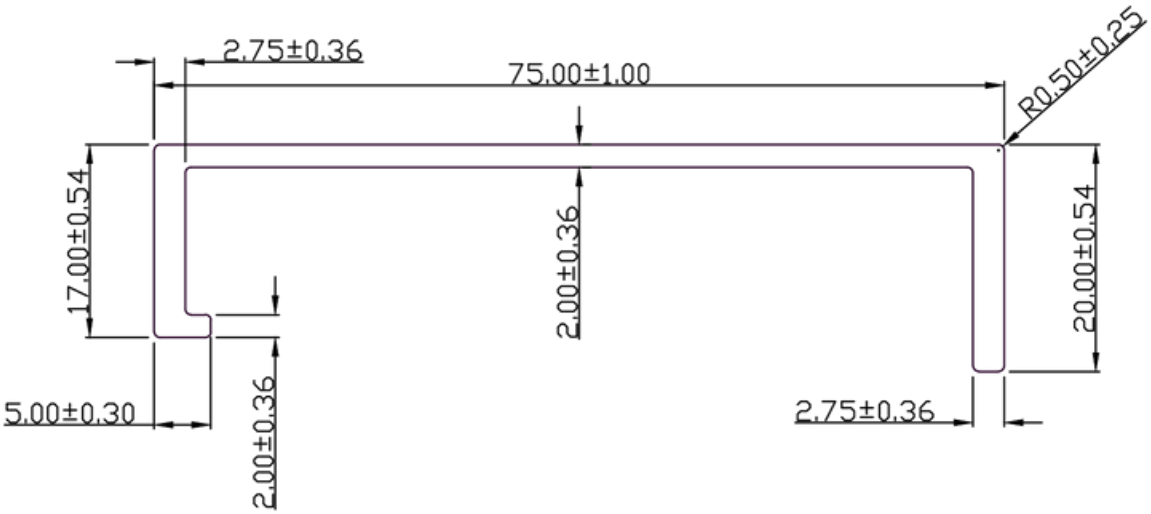

WITH DIN ISO 2768-1 class C = Coarse

Dimension Longitudional	0.5 - 33 - 6 ±0.2 ±0.4	±0.3	6 - 30 ±0.5	30-120 ±0.8	120-400 ±1.2		
chamfer & radius	0.5 - 33 - 6		6 - 30 ±2.0	30-120 ±0.8	±0°15°		
Degrees & Minutes	±1.0 at 10	10-50	50-120120-400over 400				

NOTE:- ALL DIMENSIONS ARE IN mm.

AREA:- 245.0354 Sqmm^	ALLOY/TEMPER:- 6061 T6	
EX PERIMETER:- 222.3540 MM	FLATNESS:-±0.9mm^	
WEIGHT:- 0.6615 Kg/Mtr.	TOLERANCES:	
DESCRIPTION:-	ANGULARITY:-±1.4°	(M) No.:-
PARTY DRG. No.:-	straightness:-1.50mm/meter	APPROVED BY:-
SECTION NO:- NP-360	TWIST:-2.50mm/meter	SCALE:- 1.5:1

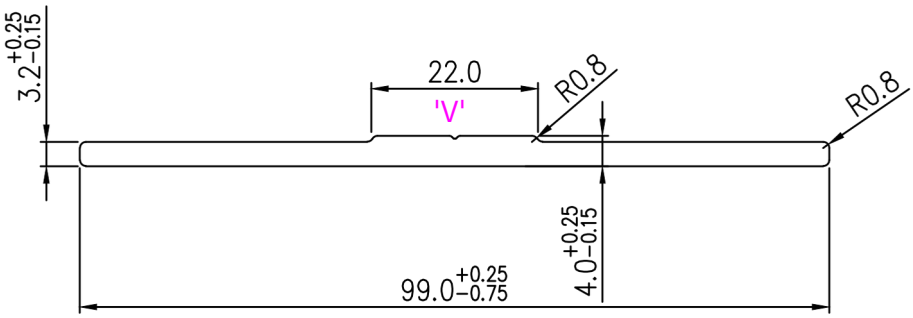

WITH DIN ISO 2768-1 class C = Coarse

Dimension Longitudional	0.5 - 33 - 6	6 - 30	30-120	120-400
	±0.2 ±0.4	±0.3	±0.5	±0.8	±1.2
chamfer & radius	0.5 - 33 - 6		6 - 30 ±2.0	30-120 ±0.8	±0°15°
Degrees & Minutes	±1.0 at 10	10-50	50-120120-400over 400		

NOTE:- ALL DIMENSIONS ARE IN mm.

AREA:- 333.4270 Sqmm^	ALLOY/TEMPER:- 6061 T6	
EX PERIMETER:- 205.4916 MM	FLATNESS:-±0.9mm^	DATE:-
WEIGHT:- 0.9002 Kg/Mtr.	TOLERANCES:	PARTY NAME:-
DESCRIPTION:-	ANGULARITY:-±1.4°	(M) No.:-
PARTY DRG. No.:- END CAP	straightness:-1.50mm/meter	APPROVED BY:-
SECTION NO:- NP-200	TWIST:-2.50mm/meter	SCALE:- 1:1

DIE NO: 10006

25103-WGFS AL 150

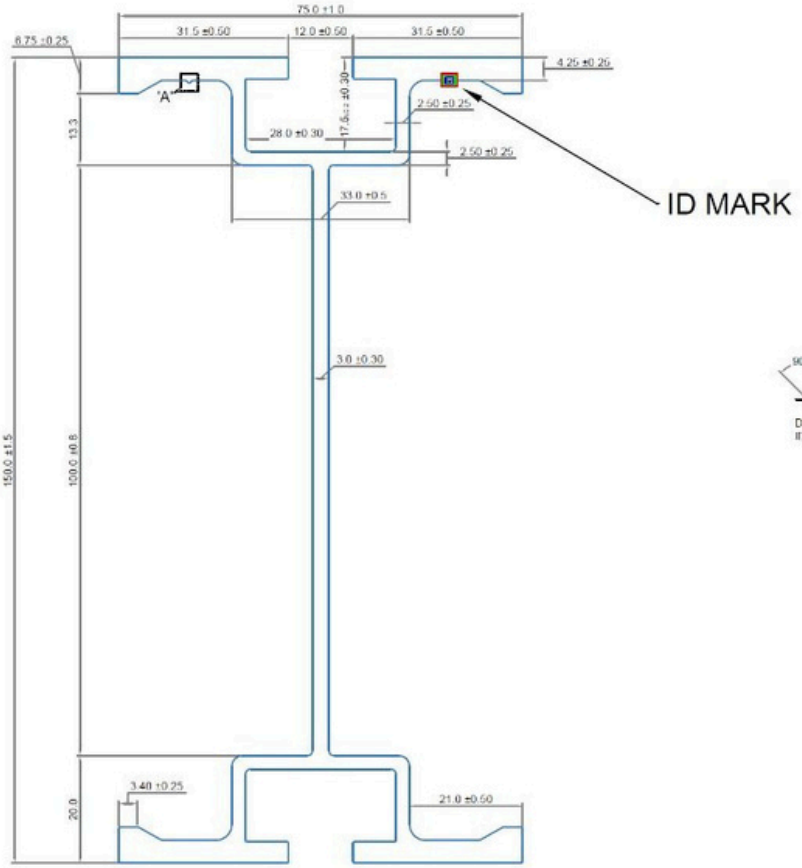

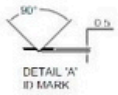

NOTE:-

1) TENSILE STRENGTH MIN 260 MPa.
2) YIELD STRESS MIN 240 MPa.
3) ELONGATION MIN 8%(50 GAUGE LENGTH).
4) STRAIGHTNESS/TWIST MAX. 1.0MM/MTR
5) GENERAL TOLERANCE IS ±0.50MM.& ANGULARITY 1°
6) SURFACE FINISH BY SELF.

(K) CRITICAL DIMENSION

* ALL DIMENSIONS ARE IN MM.

AREA	1218.64	MM^2	DRAWN	A.G.	PROJECTION
PERIMETER	726.34	MM	DATE	16.07.2025	
WEIGHT	3.29	KG/MTR	CHECKED	R.C.	
Wt. RANGE	3.12 - 3.45	KG/MTR	APPD.	K.T.	CUSTOMER NAME- / REV.
ALLOY	6061-T6		SCALE	NTS	0

Global Solutions For Aluminium Extrusions

SR. NO	ITEM CODE	DESCRIPTION	LENGTH +0.0MM/-2.0MM	WEIGHT IN Kg
1	25HFA5070-AS	ALUMINIUM SECONDARY 6.5" X 5" BEAM-STRINGERS WITH PLASTIC NAILER 7'	2134	10.0
2				
3				

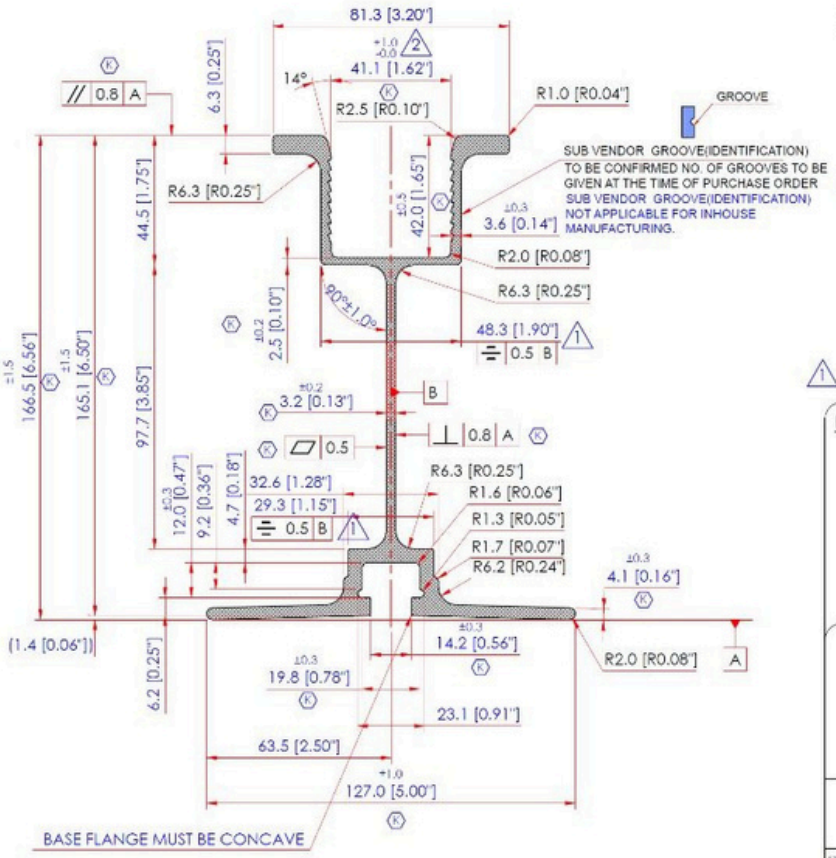

ALUMINUM SECONDARY BEAM

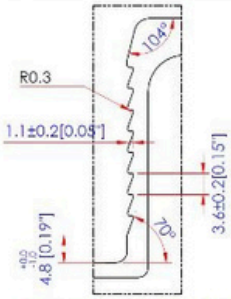

1 SERATION DETALS

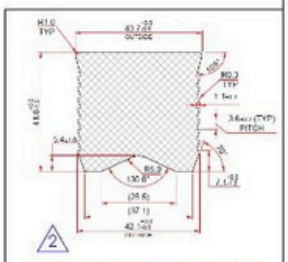

2 LUMBER SECTION DRG. FOR REFARANCE ONLY

NOTE:-

ALL DIMENSIONS ARE IN MM & [INCH]

1) MATERIAL: A6061-T6/A6005-T6/EQUIVALENT
2) MECHANICAL PROPERTIES:
   a) TENSILE STRENGTH MIN. 260 MPa.
   b) YIELD STRESS MIN. 240 MPa.
   c) ELONGATION MIN. 8% ON PROPORTIONAL GAUGE LENGTH
   d) HARDNESS :BRINELL 80 HB MIN.
4) SECTION AREA.: 1728.0 MM²
5) WEIGHT.: 4.7 kgs/M. (3.2 lb/ft) (±5.0% IN WEIGHT)
7) STRAIGHTNESS/TWIST MAX. 1.0 MM/M.
8) GENERAL TOLERANCE.: ±1.0MM.& ANGULARITY 0.5°
9) SURFACE FINISH BY .: SELF COLOR

K CRITICAL DIMENSION

DRAWING UNDER DEVELOPMENT

REV	DESCRIPTION	INITIAL	DATE
2	TOL. CHANGED ±0.0 TO +1.0/-0.0 & VIEW ADDED	SOHAM VC	03-02-2025
1	CD & T ADDED, SERATION DETAILS ADDED	K.VALIMBE	05-12-2024

DRAWN	KISHOR	TITLE: 10K SHORING SYSTEM ALUMINIUM SECONDARY 6.5" X 5" BEAM-STRINGERS EXTRUSION		PROJECTION	
DATE	15-02-2024				
CHECKED	S.S.U.				
APPD.	N. MODI	TOTAL WT. IN KGS.	SHEET	DRG. NO. / FILE NAME	REV.
SCALE	1:1		1 OF 1	T10K-ASB-EX	02